IBPS Clerk Mains 2024

QUESTIONS + SOLUTIONS

13 October memory-based paper

English edition | Memory-based paper

Question numbers 1-190

Contents

Questions begin on page 2.
Solutions begin on page 42.

Source: uploaded Adda247 / Bankersadda material.
Compilation and page branding: ExamTune. Question content and supplied answers are retained.

IBPS Clerk Mains PYP (Held on 13.10.2024)

Q1. The Reserve Bank of India (RBI) has approved Tata Capital Limited's (TCL) conversion from a non-banking finance company (NBFC)-core investment company (CIC) to which of the following types of companies? (August 2024)
(a) NBFC-microfinance company (MFC)
(b) NBFC-asset finance company (AFC)
(c) NBFC-investment credit company (ICC)
(d) NBFC-leasing finance company (LFC)
(e) NBFC-factoring company (FC)

Q2. Which of the following public sector insurance companies continue to be identified as Domestic Systemically Important Insurers (D-SIIs) by IRDAI?
1. Life Insurance Corporation of India (LIC)
2. General Insurance Corporation of India (GIC Re)
3. United India Insurance Company
4. New India Assurance Company
(a) 1, 2, and 3 only
(b) 2, 3, and 4 only
(c) 1, 2, and 4 only
(d) 1 and 2 only
(e) 1, 3, and 4 only

Q3. The National Payments Corporation of India (NPCI) has incorporated NBSL as its wholly owned subsidiary. In this context, what does the letter 'B' stand for in NBSL? (August 2024)
(a) Bharat
(b) Banking
(c) Business
(d) Blockchain
(e) BHIM

Q4. Which organization has recently approved a $1.5-billion loan to help India accelerate its low-carbon energy development, focusing on green hydrogen, electrolysers, and renewable energy penetration? (June 2024)
(a) World Bank
(b) International Monetary Fund
(c) Asian Development Bank
(d) United Nations Development Programme
(e) European Investment Bank

Q5. The Reserve Bank of India (RBI) has increased the threshold for bulk fixed deposits for Scheduled Commercial Banks and Small Finance Banks to ₹3 crore. What was the previous threshold for bulk deposits before this revision?
(a) ₹1 crore
(b) ₹1.5 crore
(c) ₹2 crore
(d) ₹2.25 crore
(e) ₹2.5 crore

Q6. The Government of India signed a $200 million (about Rs 1,700 crore) loan with _____ to improve solid waste management and sanitation in 100 cities across eight states in the country. (July 2024)
(a) World Bank
(b) Asian Infrastructure Investment Bank (AIIB)
(c) International Monetary Fund (IMF)
(d) Asian Development Bank (ADB)
(e) European Investment Bank (EIB)

Q7. The headquarters of the Financial Action Task Force (FATF) is located in which of the following cities?
(a) Washington D.C., USA
(b) Geneva, Switzerland
(c) Paris, France
(d) London, United Kingdom
(e) Brussels, Belgium

Q8. What was the theme for India's first National Space Day, celebrated on August 23, 2024, to mark the successful landing of the Vikram Lander from Chandrayaan-3?
(a) Exploring the Lunar Surface: A Journey to the Moon and Beyond
(b) India's Moon Mission: Celebrating New Frontiers in Space Exploration
(c) Touching Lives while Touching the Moon: India's Space Saga
(d) Space for National Progress: Advancing Technology and Innovation
(e) India's Leap in Space Exploration: From Earth to the Moon

Q9. As per the recent announcement by the Reserve Bank of India (RBI), what is the updated per transaction limit for UPI Lite? (October 2024)
(a) ₹500
(b) ₹1,000
(c) ₹2,000
(d) ₹5,000
(e) ₹10,000

Q10. According to the latest Global Competitiveness Ranking by IMD, which of the following countries is not ranked in the top 5 most competitive economies in the world in 2024?
(a) Singapore
(b) Switzerland
(c) Denmark
(d) Ireland
(e) China

Q11. Tata Power Solar Systems Ltd (TPSSL) has signed an agreement with which bank to provide financing for solar units to residential and corporate customers? (August 2024)
(a) HDFC Bank
(b) Axis Bank
(c) ICICI Bank
(d) State Bank of India
(e) Kotak Mahindra Bank

Q12. The Ayushman Bharat Health Account (ABHA) is an integral part of the Ayushman Bharat Digital Mission (ABDM) that allows individuals to link and manage their health records digitally. How many digits are present in the unique ABHA number assigned to individuals under this initiative?
(a) 10
(b) 12
(c) 14
(d) 16
(e) 18

Q13. Maramadi, also known as Kalappoottu or Pothottam, is a traditional bull race conducted in which Indian state after the harvest season?
(a) Tamil Nadu
(b) Karnataka
(c) Kerala
(d) Andhra Pradesh
(e) Maharashtra

Q14. The Animal Welfare Board of India (AWBI) is headquartered in which state?
(a) Uttar Pradesh
(b) Maharashtra
(c) Tamil Nadu
(d) Haryana
(e) Karnataka

Q15. The 'Karthumbi' umbrella, highlighted by Prime Minister Narendra Modi in his 'Mann Ki Baat' program, is made by tribal women from which Indian state?
(a) Tamil Nadu
(b) Karnataka
(c) Kerala
(d) Andhra Pradesh
(e) Odisha

Q16. Which Public Sector Undertaking (PSU) has signed a Memorandum of Understanding (MoU) with US-based Petron Scientech to explore a joint venture for setting up a bio-ethylene plant in India? (August 2024)
(a) ONGC
(b) Indian Oil Corporation
(c) GAIL
(d) NTPC
(e) Bharat Petroleum Corporation Limited

Q17. Which of the following Indian sportspersons is correctly matched with their respective sport for the Paris Olympic Games?
(a) Praveen Chitravel – Weightlifting
(b) Manika Batra – Archery
(c) Bhavani Devi – Badminton
(d) Jeswin Aldrin – Boxing
(e) Aman Sehrawat – Wrestling

Q18. What is the name of the dedicated mobile app offered by the Central Pension Accounting Office (CPAO) to simplify access to services for pensioners?
(a) Pension Sathi
(b) CPAO Connect
(c) Dirghayu
(d) Vriddh Ashray
(e) Pension Samriddhi

Q19. The BioE3 Policy, recently approved by the Union Cabinet, focuses on fostering high-performance biomanufacturing. Which of the following does not align with the core themes of the BioE3 Policy?
(a) Economy
(b) Environment
(c) Employment
(d) Energy
(e) None of the above

Q20. Under which of the following Acts does the Reserve Bank of India (RBI) derive its authority to regulate the financial market in India?
(a) Reserve Bank of India Act, 1934
(b) Banking Regulation Act, 1949
(c) Payment and Settlement Systems Act, 2007
(d) Securities Contract (Regulation) Act, 1956
(e) Companies Act, 2013

Q21. Prime Minister Narendra Modi recently presented four BHISHM Cubes to the Government of Ukraine. What is the capacity of each BHISHM Cube in terms of handling cases in emergency situations?
(a) Around 50 cases
(b) Around 100 cases
(c) Around 200 cases
(d) Around 300 cases
(e) Around 400 cases

Q22. What is the maximum income limit within a financial year for salaried resident individuals to be eligible to file the ITR 1 form for income tax returns in India?
(a) Rs 25 lakh
(b) Rs 50 lakh
(c) Rs 75 lakh
(d) Rs 1 crore
(e) Rs 1.5 crore

Q23. According to the revised guidelines by the RBI, deposit-taking housing finance companies (HFCs) are required to maintain liquid assets to the extent of what percentage of public deposits on an ongoing basis by January 1, 2025?
(a) 10%
(b) 12%
(c) 13%
(d) 14%
(e) 15%

Q24. Among the Indian states, which one has the highest total area covered by wetlands, contributing significantly to biodiversity and ecosystem services?
(a) West Bengal
(b) Gujarat
(c) Assam
(d) Uttar Pradesh
(e) Madhya Pradesh

Q25. Which of the following countries is not among the top 5 zinc-producing countries in the world as of 2023?
(a) China
(b) Peru
(c) Australia
(d) India
(e) Russia

Q26. What is the new upper transaction limit for tax payments using the Unified Payments Interface (UPI) as per the National Payments Corporation of India's recent update?
(a) ₹1 lakh
(b) ₹2 lakh
(c) ₹3 lakh
(d) ₹4 lakh
(e) ₹5 lakh

Q27. Where was the second-largest diamond ever discovered, a rough 2,492-carat stone, recently unearthed?
(a) South Africa
(b) Namibia
(c) Botswana
(d) Angola
(e) Sierra Leone

Q28. According to a study by the Reserve Bank of India (RBI), what is the expected percentage increase in total private sector investment in the current financial year compared to the previous financial year? (August 2024)
(a) 34%
(b) 45%
(c) 54%
(d) 65%
(e) 70%

Q29. How many core promoter banks initially formed the consortium to establish the National Payments Corporation of India (NPCI)?
(a) 8
(b) 10
(c) 12
(d) 15
(e) 20

Q30. What is the maximum annual turnover limit for Micro Enterprises as per the classification guidelines for manufacturing and service enterprises?
(a) Rs. 1 crore
(b) Rs. 2 crore
(c) Rs. 3 crore
(d) Rs. 5 crore
(e) Rs. 10 crore

Q31. The National Strategy for Financial Education (NSFE) for the period 2020-2025 has been prepared by the National Centre for Financial Education (NCFE) in consultation with which of the following financial sector regulators?
(a) Reserve Bank of India (RBI)
(b) Securities and Exchange Board of India (SEBI)
(c) Insurance Regulatory and Development Authority of India (IRDAI)
(d) Pension Fund Regulatory and Development Authority (PFRDA)
(e) All of the above

Q32. In the 4th edition of the Ranking of States on Support to Startup Ecosystems, which state was recognized as the "Best Performer" in Category B (States and UTs with population < 1 crore)?
(a) Arunachal Pradesh
(b) Himachal Pradesh
(c) Meghalaya
(d) Nagaland
(e) Goa

Q33. The maximum loan amount eligible for credit guarantee cover has been increased from INR 1.5 lakhs to INR 7.5 lakhs under the revamped Model Skill Loan Scheme. Under the revamped Model Skill Loan Scheme, what percentage of the loan amount is backed by a guarantee against default?
(a) 50%
(b) 60%
(c) 75%
(d) 85%
(e) 90%

Q34. Which institute's scientists developed a new computational model for detecting cervical dysplasia with an average accuracy of 98.02%? (July 2024)
(a) Indian Institute of Science (IISc)
(b) Tata Institute of Fundamental Research (TIFR)
(c) Institute of Advanced Study in Science and Technology (IASST)
(d) Indian Council of Medical Research (ICMR)
(e) National Institute of Biomedical Imaging and Bioengineering

Q35. What is the allocation for the Nirbhaya Fund in the financial year 2024-25 as announced in the Union Budget?
(a) Rs 100 crore
(b) Rs 150 crore
(c) Rs 200 crore
(d) Rs 250 crore
(e) Rs 300 crore

Q36. In the Senior Citizen Savings Scheme (SCSS), what is the age limit for the second applicant in a joint account?
(a) Above 50 years
(b) Above 55 years
(c) Above 60 years
(d) No age limit
(e) Above 65 years

Q37. What is the revised NPS (National Pension System) contribution limit for employers in the private sector as a percentage of an employee's basic salary?
(a) 8%
(b) 10%
(c) 12%
(d) 14%
(e) 15%

Q38. Which organization is responsible for issuing the Certificate of Coverage (COC) to migrant Indian workers for social security schemes in SSA (Social Security Agreement) countries?
(a) Ministry of Labour and Employment
(b) Employees' Provident Fund Organisation (EPFO)
(c) National Skill Development Corporation (NSDC)
(d) Ministry of External Affairs
(e) Labour Welfare Board

Q39. Under how many categories were the National Awards for e-Governance (NAeG) 2024 conferred?
(a) Three
(b) Four
(c) Five
(d) Six
(e) Seven

Q40. In August 2024, India successfully named three underwater geographical structures in the Indian Ocean: the Ashoka seamount, the Chandragupt ridge, and the _____.
(a) Sagar Kanya seamount
(b) Raman ridge
(c) Panikkar ridge
(d) Kalpataru ridge
(e) Maurya ridge

Q41. What are the sources of revenue for the Consolidated Fund of India?
1. Revenue from direct taxes (e.g., income tax and corporate tax)
2. Revenue from indirect taxes (e.g., GST)
3. Dividends and profits from Public Sector Undertakings (PSUs)
4. Earnings from government services
5. Receipts from disinvestment, debt repayments, and loan recoveries
(a) 1, 2, and 3 only
(b) 2, 3, and 4 only
(c) 1, 3, 4, and 5 only
(d) 1, 2, 3 and 4 only
(e) All of the above

Q42. Who won the Golden Lotus (Swarna Kamal) award for Best Direction for a Hindi film at the 70th National Film Awards for the year 2022?
(a) Vivek Agnihotri
(b) Sooraj R. Barjatya
(c) R. Madhavan
(d) Sanjay Leela Bhansali
(e) Prashanth Neel

Q43. SEBI has directed BSE to pay a differential regulatory fee for past dues with interest, due to a change in fee calculation from premium turnover to notional value of annual turnover. At what interest rate must BSE pay on any unpaid, delayed, or short-paid amounts for these past dues?
(a) 10% per annum
(b) 12% per annum
(c) 15% per annum
(d) 18% per annum
(e) 20% per annum

Q44. How many foreign banks operating under the wholly owned subsidiary (WOS) model have been appointed as agency banks by the RBI as of 2023?
(a) None
(b) One
(c) Two
(d) Three
(e) Five

Q45. Which of the following is not a term related to mutual funds?
(a) Net Asset Value (NAV)
(b) Systematic Investment Plan (SIP)
(c) Expense Ratio
(d) Moratorium Period
(e) Asset Under Management (AUM)

Q46. Under the Differential Rate of Interest (DRI) Scheme, banks provide finance up to _____ at a concessional interest rate of 4% per annum for eligible weaker sections.
(a) ₹10,000
(b) ₹12,000
(c) ₹15,000
(d) ₹18,000
(e) ₹20,000

Q47. Under the Self Employment Scheme for Rehabilitation of Manual Scavengers (SRMS), what is the maximum amount of capital subsidy per beneficiary?
(a) Rs. 3 lakh
(b) Rs. 3.25 lakh
(c) Rs. 4 lakh
(d) Rs. 5 lakh
(e) Rs. 5.5 lakh

Q48. Agri-Clinics under the Agri Clinic and Agribusiness Centres (ACABC) Scheme provide support in which of the following areas?
(a) Soil health and plant protection
(b) Crop insurance and post-harvest technology
(c) Clinical services for animals and feed management
(d) Prices of various crops in the market
(e) All of the above

Q49. Shikhar Dhawan announced his retirement from all forms of cricket in August 2024. What remarkable record did he achieve on his Test debut?
(a) Highest score in a debut Test inning
(b) Most sixes in a debut match
(c) Fastest Test century on debut
(d) Most fours in a debut match
(e) Highest strike rate on debut

Q50. In May 2024, India agreed with which country to work towards an early conclusion of the Local Currency Settlement System Agreement for enabling trade in domestic currencies?
(a) South Africa
(b) Nigeria
(c) Brazil
(d) Russia
(e) Kenya

Directions (51-56): Read the following passage and answer the given questions.
Nuclear power and hydropower are crucial components of global low-carbon electricity generation, collectively supplying three-quarters of the world's low-carbon energy. Over the last 50 years, nuclear power alone has prevented over 60 gigatonnes of CO2 emissions, equating to nearly two years' worth of global energy-related emissions. Despite this significant contribution, nuclear power is facing a decline in advanced economies, where plants are closing, and new investments are scarce. This comes at a time when the world urgently needs more low-carbon energy sources to meet international climate goals.
The decline of nuclear power could have serious implications for both electricity security and the cost of energy. Projections suggest that nuclear power in advanced economies could drop by as much as two-thirds by 2040 if no significant actions are taken. This would hinder efforts to reduce global CO2 emissions, as outlined in the Paris Agreement and modeled in scenarios like the Sustainable Development Scenario, which calls for rapid cuts in emissions. Achieving these reductions without nuclear power would require massive investments in renewables and energy efficiency, further complicating an already challenging transition to a low-carbon economy.
This decline poses serious risks to global climate goals. Nuclear power provides a reliable and consistent source of low-carbon energy that complements intermittent renewable sources like solar and wind. Without it, the costs of transitioning to a fully sustainable energy system will likely increase, and progress in reducing emissions could slow significantly.
To address these concerns, the report suggests several key government actions. These include supporting the safe operation of existing nuclear plants, encouraging the construction of new nuclear facilities, and investing in advanced nuclear technologies. By taking these steps, countries can ensure that nuclear power remains a vital part of the global low-carbon energy mix.

Q51. Which of the following statements can be inferred from the passage?
(I) Nuclear power has played a major role in reducing global CO2 emissions over the past decades.
(II) The decline of nuclear power in advanced economies is primarily due to safety concerns.
(III) The cost of transitioning to a fully renewable energy system without nuclear power could rise significantly.

(a) Only (I)
(b) Only (II)
(c) Both (I) and (III)
(d) Only (III)
(e) All (I), (II), and (III)

Q52. According to the passage, why is the decline of nuclear power a cause for concern?
(a) It poses a threat to the stability and security of global energy supplies.
(b) It could result in a rise in CO2 emissions, putting international climate goals at risk.
(c) Nuclear power is the only reliable source of low-carbon energy that can support global energy needs.
(d) The expenses associated with maintaining existing nuclear power plants are excessively high, contributing to the decline.
(e) The development and implementation of advanced nuclear technologies are not yet practical.

Q53. Which of the following actions is NOT suggested by the report to maintain nuclear power as part of the global energy mix?
(a) Promoting the safe operation and management of existing nuclear power plants.
(b) Allocating resources towards the development of advanced nuclear technologies.
(c) Giving priority to renewable energy sources over nuclear power in energy strategies.
(d) Supporting the construction of new nuclear power facilities.
(e) Making sure that nuclear power continues to play a role in the global low-carbon energy strategy.

Q54. Which of the following can be inferred as a consequence of removing nuclear power from the global energy mix?
(a) Solar and wind power would completely take over as dependable sources of energy, replacing nuclear power.
(b) Advanced economies would cease their investments in renewable energy technologies.
(c) The world would require much larger investments in renewable energy sources and improvements in energy efficiency.
(d) CO2 emissions would significantly rise, leaving no feasible alternatives for reducing emissions.
(e) Achieving the objectives of the Paris Agreement would become easier.

Q55. Which of the following is an incorrect interpretation of the phrase "which calls for rapid cuts in emissions" as used in the passage?
(a) The Sustainable Development Scenario demands immediate and significant reductions in CO2 emissions.
(b) Meeting the goals of the Paris Agreement requires accelerated efforts in cutting CO2 emissions.
(c) The scenario emphasizes swift actions for CO2 reduction to achieve climate goals.
(d) The passage implies that nuclear power helps meet the rapid emission reduction requirements.
(e) The phrase indicates that slow progress in emission reductions is acceptable.

Q56. What is one of the major consequences of the decline in nuclear power?
(a) A growing global dependence on nuclear energy, leading to a shift away from other energy sources and increasing the demand for nuclear power in the energy mix.
(b) Strengthened electricity security across various regions, resulting in improved stability and reliability of energy supplies despite the reduced reliance on nuclear power.
(c) Increased cost efficiency within the energy sector, allowing for more affordable energy production and distribution due to the decline in nuclear energy investments.
(d) Significant impacts on both electricity security and the overall cost of energy, as the decline of nuclear power undermines the stability of energy supplies and increases energy-related expenses.
(e) A higher dependence on fossil fuels in advanced economies, causing a shift back to more carbon-intensive energy sources to compensate for the decline of nuclear power.

Directions (57-60): In the questions below, a sentence is divided into several parts. Select the most appropriate sequence to rearrange the parts into a grammatically correct and contextually coherent sentence.

Q57.
(A) of climate change and preserving
(B) is essential for mitigating the adverse effects
(C) and responsible resource management,
(D) including renewable energy usage, waste reduction,
(E) biodiversity for future generations
(F) adopting sustainable practices across industries,
(a) FDCBAE
(b) FDBCEA
(c) EBADAC
(d) EBACAD
(e) EBCFAD

Q58.
(A) but also about fostering a culture of trust,
(B) encouraging open communication, and
(C) effective leadership within organizations is
(D) empowering team members to take
(E) ownership of their roles, ultimately driving collective success
(F) not only about making strategic decisions
(a) CDEBAF
(b) BDECFA
(c) CFABDE
(d) BDEAFC
(e) BCEDFA

Q59.
(A) artificial intelligence has the potential to
(B) necessitate careful regulation and
(C) revolutionize industries, but its ethical implications,
(D) job displacement, bias, and data security,
(E) responsible technological development
(F) including concerns over
(a) ACDFEB
(b) ADCFEB
(c) ACFEDB
(d) ACFDBE
(e) ABCDEF

Q60.
(A) and infrastructure strain, requiring
(B) livable environments for future populations
(C) such as housing shortages, pollution,
(D) as urbanization continues to reshape
(E) innovative planning to ensure sustainable,
(F) the global landscape, cities face growing challenges

(a) DFCAEB
(b) DECABF
(c) DACEBF
(d) FEDACB
(e) FADCEB

Directions (61-67): In the following questions, a sentence is divided into several parts. One of the parts is grammatically correct, while the others contain errors. Identify the incorrect part(s) from the sentence. If all parts are correct, select "no error" as the answer.

Q61. To understand personal finance, (A)/ **including budgeting and investing,/** empower individuals to make (B)/ informed decisions and (C) /achieve long-term financial security. (D)
(a) A
(b) A-B
(c) C-D
(d) D
(e) No error

Q62. Not only the team achieved (A)/ **remarkable success in the project,** / but never before they had encountered (B) / such challenges that tested their (C)/ skills and determination to this extent. (D)
(a) A-D
(b) A-B
(c) C-D
(d) D
(e) No error

Q63. The rapidly growth in urban populations (A) / have led to increased demand (B) / for housing, infrastructure, and (C) / public services in many (D) / **developing countries.**
(a) A-B
(b) B-C
(c) C-D
(d) D
(e) No error

Q64. If we would have known (A) / about the new policy changes, (B) / we had prepared (C) / **more effectively**/ for the upcoming challenges. (D)
(a) A-B
(b) B-C
(c) A-C
(d) D
(e) No error

Q65. Neither the employees nor (A) / the manager were aware (B) / of the technical issue that (C) / cause the system to (D) / **shut down unexpectedly.**
(a) A-B
(b) B-C
(c) A-D
(d) B-D
(e) No error

Q66. Every year, (A) / thousands of students applies (B) / for admission to prestigious (C) / universities around the world, (D) / **hoping to secure a place in top programs.**
(a) A-B
(b) B-C
(c) A-D
(d) B
(e) No error

Q67. Each of the participants / were asked to provide (A) / feedback on the event, (B) / including their suggestions for improvement (C) / and their overall satisfaction with the experience. (D)
(a) A-B
(b) B-C
(c) A
(d) D-E
(e) No error

Directions (68-73): Read the following passage and answer the given questions.
Solar power is steadily reshaping the energy landscape, not just through its promise of sustainability, but by overcoming some of the long-standing technical barriers that once held it back. One of the most significant advancements in recent years lies in the rise of perovskite solar cells. Unlike conventional silicon-based panels, these cells are more affordable to produce and remarkably versatile, offering a faster route to mass adoption of solar energy. The reduced production costs promise to democratize clean energy access, potentially making solar a primary power source for both individuals and industries.
Efficiency, a crucial measure of solar technology's viability, has also seen dramatic improvements. Photovoltaic (PV) panels, now surpassing 20% efficiency in standard conditions, can convert more sunlight into electricity than ever before. Cutting-edge research into tandem solar cells is even pushing efficiency above 25%, challenging old assumptions about solar's limitations.
In addition to these technical leaps, solar power offers unparalleled environmental benefits. Unlike fossil fuel-based energy, solar power produces no harmful emissions during electricity generation, helping to combat climate change and significantly reducing global carbon emissions. This makes it an environmentally attractive alternative as countries seek to meet international climate goals.
Another challenge, historically associated with solar energy, was its intermittency—solar power generation stops when the sun isn't shining. However, advances in battery storage systems are beginning to resolve this issue. These systems can store excess power generated during peak sunlight hours and release it during cloudy periods or at night, making solar energy more reliable.
Grid integration is another key development. Solar power is now more easily fed into national and regional grids, allowing for seamless distribution. This scalability ensures that solar energy can not only meet individual needs but also contribute to larger, more stable power systems, fostering a transition to a greener future without compromising energy availability.
Ultimately, solar power's continued evolution positions it as a major force in the global energy shift, with its ecological, economic, and technical advantages driving the momentum forward.

Q68. According to the passage, which of the following statements best reflects how perovskite solar cells are different from conventional silicon-based solar panels?
(a) Perovskite solar cells are more efficient and environmentally friendly compared to silicon-based solar panels.
(b) Silicon-based solar panels are more reliable but less affordable compared to perovskite solar cells.
(c) Unlike silicon-based panels, perovskite cells are easier to integrate into national power grids, enhancing energy distribution.
(d) Perovskite solar cells are more cost-effective and versatile, offering a more accessible route to widespread solar energy adoption.
(e) The development of perovskite cells marks the first time solar panels have surpassed 25% efficiency.

Q69. Which of the following assumptions about the future of solar energy is most likely to be weakened if the technological advancements discussed in the passage fail to materialize?
(I) Solar energy will become the primary energy source for both individuals and industries.
(II) Global reliance on fossil fuels will decrease as solar technology becomes more affordable and efficient.
(III) Climate change goals will be met if solar power continues to evolve as expected.
(a) Only (I)
(b) Both (I) and (II)
(c) Only (III)
(d) Both (II) and (III)
(e) All (I), (II), and (III)

Q70. What is the tone of the passage?
(a) Pessimistic
(b) Critical
(c) Optimistic
(d) Neutral
(e) Skeptical

Q71. Which of the following best reflects the significance of "grid integration" in the context of solar power as discussed in the passage?
(a) Grid integration enhances the efficiency of solar cells by improving energy distribution across regions.
(b) It allows solar energy to be more reliably used in tandem with fossil fuel-based energy systems.
(c) Grid integration enables solar power to seamlessly meet both small-scale and large-scale energy needs, making it a more stable power source.
(d) Grid integration reduces the environmental impact of solar power by ensuring optimal energy use and storage.
(e) It ensures that solar energy can be harnessed even in regions with lower sunlight exposure.

Q72. Identify the incorrect statements based on the passage.
(I) The environmental benefits of solar energy include zero emissions during production and installation.
(II) Solar power's grid integration has reduced the need for advancements in battery storage systems.
(III) Perovskite solar cells have achieved higher efficiency levels than traditional photovoltaic panels.
(a) Only (I)
(b) Both (I) and (III)
(c) Only (II)
(d) Only (III)
(e) All (I) (II) (III)

Q73. Which of the following is an implied benefit of tandem solar cells in the passage?
(a) Tandem solar cells are easier to manufacture than conventional photovoltaic panels.
(b) Tandem solar cells increase solar energy's reliability by storing excess energy during peak hours.
(c) Tandem solar cells help overcome the physical limitations previously associated with traditional solar technology.
(d) Tandem solar cells reduce solar power’s environmental footprint, making them more sustainable.
(e) Tandem solar cells are less expensive than silicon-based and perovskite solar cells.

Q74. Read the information and answer the given question.
John has consistently demonstrated a lack of punctuality, often arriving late to meetings and missing important deadlines, which has caused disruptions in the workflow of the team. Despite numerous reminders and opportunities to improve his time management skills, he continues to struggle with completing tasks on schedule, putting added pressure on his colleagues. Additionally, John has developed a reputation for being arrogant, dismissing constructive feedback from both peers and supervisors, and often undermining the efforts of others with an overconfident attitude.

His reluctance to acknowledge these issues has created tension in the workplace, making it difficult for the team to collaborate effectively.

Based on the paragraph, what can be inferred about John's work behavior?

(a) John frequently meets deadlines but struggles with maintaining a positive relationship with his team.
(b) John's arrogance stems from the heavy workload he faces and the constant criticism he receives regarding his personal qualities.
(c) John acknowledges that he lacks necessary skills for the project and thus withdraws from it.
(d) John is not dependable for urgent projects due to his tardiness and arrogance.
(e) John is known for always providing constructive feedback to his peers.

Q75. Read the following passage and answer the given question.

Lily is a high school student who excels academically, consistently earning top grades in all her subjects. However, she often feels anxious about exams, believing that anything less than perfect marks is a failure. As a result, Lily spends long hours studying, often skipping social events and recreational activities. While her friends enjoy their weekends, Lily can usually be found at home reviewing her notes. Despite her academic success, she feels isolated and overwhelmed by the pressure to maintain her perfect record.

Based on the paragraph, what can be inferred about Lily's academic habits and social life?

(a) Lily believes that only perfect grades will help her make friends and maintain a good social life.
(b) Lily prefers studying over socializing, often choosing to stay home and review her notes while her friends go out.
(c) Lily's friends often avoid inviting her to social events because she is always too busy with her studies.
(d) Lily does not feel pressured by her academic performance and manages to enjoy her weekends with friends.
(e) Lily balances her academic success with a busy and enjoyable social life.

Directions (76-81): Read the following passage and answer the given questions.

Recent advancements in medical research have significantly improved the development of new treatments for various diseases. A primary focus has been the evolution of **personalized medicine**, an approach that tailors medical treatment to the individual characteristics of each patient. Researchers have been exploring how genetic, environmental, and lifestyle factors influence the effectiveness of drugs. One prominent example is the use of **targeted therapies** in cancer treatment. Instead of using a one-size-fits-all approach, targeted therapies focus on specific molecular targets associated with cancer growth. Drugs like **imatinib**, used to treat chronic myeloid leukemia (CML), block certain proteins that promote the growth of cancer cells without harming normal cells. This precise targeting leads to fewer side effects and improved treatment outcomes.

Another area of research revolves around **mRNA vaccines**, a groundbreaking innovation in the field of immunology. Though mRNA vaccine technology has been studied for decades, it gained widespread attention during the COVID-19 pandemic. Researchers successfully developed vaccines like **Pfizer-BioNTech's** mRNA vaccine in record time, which instructs the body's cells to produce a protein that triggers an immune response. This method provides a safer and faster way to develop vaccines, as it avoids the traditional requirement of growing live viruses in laboratories. The success of these vaccines has spurred further research into using mRNA technology to treat other diseases, such as influenza, HIV, and certain cancers.

These breakthroughs in research, from personalized therapies to innovative vaccines, are transforming the landscape of medicine, offering more effective and individualized treatments while reducing potential side effects. The ongoing exploration of these fields holds promise for the future of healthcare.

Q76. Based on the passage, which of the following assumptions can be made about mRNA vaccines?

(I) mRNA vaccine technology has applications beyond COVID-19 treatment.
(II) mRNA vaccines can be developed more quickly than traditional vaccines.
(III) mRNA vaccines have proven to be more effective than all other vaccine types.
(a) Only (I)
(b) Both (I) and (II)
(c) Only (III)
(d) Both (I) and (III)
(e) All (I), (II), and (III)

Q77. Identify the correct statement based on the passage.
(a) Imatinib is used to treat various forms of cancer by targeting cancer cells indiscriminately.
(b) Traditional vaccines are faster to develop than mRNA vaccines, which require growing live viruses.
(c) Personalized medicine primarily focuses on environmental factors while ignoring genetic influences.
(d) mRNA vaccines instruct cells to produce proteins that trigger an immune response.
(e) Targeted therapies cause significant harm to normal cells during cancer treatment.

Q78. What is the tone of the passage?
(a) Doubtful
(b) Hopeful
(c) Analytical
(d) Alarmist
(e) Pessimistic

Q79. Based on the passage, what is the *most likely* reason for the growing interest in mRNA vaccine technology beyond COVID-19?
(a) mRNA vaccines have proven to be more cost-effective than all other types of vaccines.
(b) mRNA technology offers a platform that can be adapted to develop treatments for various diseases quickly.
(c) The use of mRNA vaccines has eradicated the need for traditional vaccine development.
(d) mRNA vaccines offer permanent immunity to diseases, unlike other vaccines.
(e) Research into mRNA vaccines focuses solely on treating infectious diseases like influenza and HIV.

Q80. Which of the following can be inferred about the potential future challenges of personalized medicine based on the passage?
(a) Personalized medicine may become too expensive for widespread adoption due to its individualized approach.
(b) Personalized medicine is likely to cause more side effects because of its focus on targeting specific molecular profiles.
(c) The success of personalized medicine will depend heavily on integrating genetic research into medical treatments.
(d) Personalized medicine will soon replace all forms of traditional medicine, making standardized treatments obsolete.
(e) Personalized medicine is effective only in treating cancer and has limited applications in other fields of healthcare.

Q81. Which of the following statements can be inferred from the passage regarding advancements in medical research?
(I) Targeted therapies have reduced the harmful side effects associated with traditional cancer treatments.
(II) mRNA vaccine technology is gaining interest for its potential to treat diseases beyond infectious ones.
(III) Personalized medicine focuses exclusively on genetic factors when developing individualized treatments.
(a) Only (I)
(b) Both (I) and (II)
(c) Only (III)
(d) Both (II) and (III)
(e) All (I), (II), and (III)

Directions (82-87): In the following questions, a paragraph is provided with a few highlighted words. Select the most appropriate option that can replace the highlighted word to ensure the paragraph is both grammatically and contextually accurate.
A recent psychological study on decision-making under uncertainty has **endured (A)** on the cognitive biases that influence human choices. The researchers focused on the prospect theory, which suggests that individuals are more likely to avoid losses than to pursue **equivalent (B)** gains, even when the risks are identical. Participants were asked to make decisions involving hypothetical financial **backdrop(C)**, and the results confirmed a pronounced loss **tactic**

(D) across various demographics. The study also revealed that framing effects, or how a problem is presented, significantly **endorsed (E)** participants' risk tolerance. This research has broad implications for fields like **fictious (F)** economics, marketing, and public policy, as understanding these biases can improve strategies for influencing consumer behavior and decision-making processes.

Q82. Which of the following is most suitable to replace (A)?
(a) emphasis
(b) proposed
(c) shed light
(d) underscored
(e) No replacement required

Q83. Which of the following is most suitable to replace (B)?
(a) fabricated
(b) economic
(c) sustenance
(d) No replacement required
(e) commercial

Q84. Which of the following is most suitable to replace (C)?
(a) No replacement required
(b) scenarios
(c) situation
(d)predicament
(e) context

Q85. Which of the following is most suitable to replace (D)?
(a) embrace
(b) No replacement required
(c) seizure
(d) aversion
(e) espousal

Q86. Which of the following is most suitable to replace (E)?
(a) No replacement required
(b) process
(c) coagulated
(d) replaced
(e) altered

Q87. Which of the following is most suitable to replace (F)?
(a) organizational
(b) behavioral
(c) No replacement required
(d) cohort
(e) realistic

Directions (88-89): In the following question, a sentence is presented with a blank. Select the most appropriate word to fill in the blank, ensuring that the sentence is both grammatically correct and contextually appropriate.

Q88. The workers showed great _____ during the strike to demand better conditions.
(a) solitude
(b) apathy
(c) hostility
(d) solidarity
(e) detachment

Q89. The artist found inspiration for his new sculpture in his nightly _____.
(a) routine
(b) muse
(c) monotony
(d) impulse
(e) hesitation

Directions (90-90): In the paragraph below, some phrasal verbs may be incorrectly positioned. Identify the phrasal verbs that should be swapped to create a coherent paragraph.

Q90. As the project deadline approached, the team needed to **pull together (i)** their resources to ensure success. They began to **carry on (ii)** the final details, making sure nothing was overlooked. Everyone felt the pressure, but they were determined to **go over (iii)** despite the challenges. By the end of the day, they managed to **wrap up (iv)** their tasks, feeling accomplished and ready for the presentation.
(a) i-ii
(b) i-iv
(c) ii-iv
(d) ii-iii
(e) No interchange required

Directions (91-95): Read the given information carefully and answer the questions based on it:
Nine persons of a three-generation family are of different age (years). The persons are A, D, N, M, H, S, T, W and K but not related in the same order as given.
W is son-in-law of S who is parent of K's spouse. K's mother-in-law has only one daughter. A is spouse of S and paternal grandparent of N. K's child is niece of T who has two children but D is not child of W. Number of males is one more than number of females. D and A are not of same gender.
To find the age of all persons, follow the instructions below:
Age of the youngest member is equal to the total number of persons in the family. Age of D's spouse is three times the age of youngest member. T's father age is twice of K's age. Ratio between the age of T's niece and D's father is 2:9 respectively. Difference between the age of both the cousin of N is 6 years. W's age is equal to the total age of A's grandchildren. Difference between the age of A's son-in-law and M's mother is 1. Ratio between the age of K's mother-in-law and S's daughter is 9:5 respectively. D's age is one more than the twice of M's age but D is not youngest in his generation.

Q91. What is the total age of all the persons of 2nd generations?
(a) 102 years
(b) 119 years
(c) 117 years
(d) 129 years
(e) None of the above

Q92. Which of the following statement is/are correct?
I. oldest person's age is an odd number
II. M is nephew of D
III. T is older to K
(a) Only III
(b) Only I
(c) Both II and III
(d) Both I and II
(e) All I, II and III

Q93. Four of the following five are similar based on their age, who among the following is dissimilar to others?
(a) S's son
(b) W's father-in-law
(c) H's grandmother
(d) T's husband
(e) M's sibling

Q94. Who among the following is 5th oldest in the family?
(a) K's sister-in-law
(b) D's wife
(c) W's brother-in-law
(d) H's mother
(e) T's niece

Q95. What is the relation of the one who is 31 years old to the one who is 12 years old?
(a) Sister
(b) Father
(c) Nephew
(d) Niece
(e) None of the above

Directions (96-100): Study the following information carefully and answer the questions given below.
Fourteen persons B, C, D, E, F, G, H, I, J, K, L, M, N and O sit around two tables—one circular (referred to as a rope-shaped table) inscribed within a square-shaped table. Four persons sit at the corners of the square table, while four sit in the middle of the sides. The persons who sit at corners face inside and the persons who sit on the middle of the sides of table face outside. Six persons sit at the circular rope-shaped table at a distance of multiples of 3 between them consecutively such as 3m, 6m, 9m and so on. The persons who sit on the circular rope shaped table face inside.
F sits 9m to the left of J in a circular shaped table. There is distance of 27m between J and G when counting from one of the sides from J. O sits third to the right of I. Two persons sit between O and N. L sits immediately to the right of C. N doesn't sit on the middle of the sides of the table. G is an immediate neighbour M. There is a distance of 42m between G and B. There is a distance of more than 12m between B and R when counting from both sides of B. There is a distance of more than 15m between R and G when counting from both sides of R. H sits third to the left of D. E sits third to the left of L. D is not an immediate neighbour of O.

Q96. What is the position of D with respect of C?
(a) Fifth to the left
(b) Fifth to the right
(c) Sixth to the right
(d) Sixth to the left
(e) Second to the right

Q97. If E and R interchanged their places then who sits 45m away from E when counting from one of the sides from E?
(a) B
(b) F
(c) H
(d) R
(e) M

Q98. Which of the following pairs of persons are immediate neighbors?
(a) E and O
(b) R and G
(c) F and J
(d) B and M
(e) J and B

Q99. Four of the following five form a group based on their seating arrangement. Which one does not belong to this group?
(a) B
(b) O
(c) I
(d) N
(e) C

Q100. Which of the following statements is true?
I. F sits at a distance of 9m from M when counting right of M.
II. L sits at one of the corners of the square-shaped table.
III. Four persons sit between H and C when counting from left of C.
(a) Only I
(b) Both I and II
(c) Both II and III
(d) Only III
(e) Only II

Directions (101-105): In each question, rows containing different elements are provided. To find out the resultant of a particular row, follow the given conditions:
Condition 1: If an even number is followed by an odd number, then the resultant must be the difference between the number.
Condition 2: If an odd number is followed by another odd prime number, then the sum of the resultants is added by 4.
Condition 3: If an odd number is followed by an even number, then the resultant must be the sum of both numbers.
Condition 4: If an even number is followed by an even number, then the resultant must be the be the difference between the number added by 2.
Condition 5: If an odd number is followed by another odd number (not prime), then the resultant must be product of both the number subtracted by 6.
Now, answer the following questions based on the above conditions:

Q101. What is the sum of the resultants of both rows?
25 17 36
54 22 77

(a) 70
(b) 55
(c) 67
(d) 53
(e) None of these

Q102. What is the square of the difference between the resultants of both rows?
45 34 92
13 9 78
(a) 324
(b) 441
(c) 579
(d) 676
(e) None of these

Q103. What will be the value of Y if the sum of resultant of both the rows is equal to 105?
31 46 13
63 17 Y
(a) 89
(b) 76
(c) 32
(d) 88
(e) 95

Q104. What will be the value of X and Z respectively if the difference between the resultants of both the rows is equal to 10?
12 37 X
Z 9 6
(a) 15, 18
(b) 14, 7
(c) 12, 3
(d) 22, 9
(e) None of these

Q105. What is the product of the resultants of both rows?
11 9 3
5 19 4
(a) 2800
(b) 2600
(c) 1072
(d) 2684
(e) None of these

Directions (106-109): Each of the questions below consists of a question and two statements numbered I and II given below it. You have to decide whether the data provided in the statements are sufficient to answer the question. Read both the statements and give answer.

Q106. Five boxes- A, B, C, D and E are placed one above another in a stack but not necessarily in the same order such that the bottommost box is numbered as 1 and topmost box is numbered as 5. Which box is placed at third position?

Statement I: Box A is placed above box C and immediately below box E. More than two box is placed between box E and box B.
Statement II: Box B is placed immediately below box D and two boxes above box A. Box E is placed above Box A which is placed above box C.
(a) if the data in statement I alone are sufficient to answer the question, while the data in statement II alone are not sufficient to answer the question.
(b) if the data in statement II alone are sufficient to answer the question, while the data in statement I alone are not sufficient to answer the question.
(c) if the data either in statement I alone or in statement II alone are sufficient to answer the question.
(d) if the data given in both statements I and II together are not sufficient to answer the question.
(e) if the data in both statements I and II together are necessary to answer the question.

Q107. Six persons have a meeting on six different days of the week starting from Monday to Saturday, but not necessarily in the same order?
Statement I: P has a meeting on Wednesday and three days before U. As many persons have meeting before U as after R.
Statement II: Q has a meeting before T. V has a meeting before U. P has a meeting before V.
(a) if the data in statement I alone are sufficient to answer the question, while the data in statement II alone are not sufficient to answer the question.
(b) if the data in statement II alone are sufficient to answer the question, while the data in statement I alone are not sufficient to answer the question.
(c) if the data either in statement I alone or in statement II alone are sufficient to answer the question.
(d) if the data given in both statements I and II together are not sufficient to answer the question.
(e) if the data in both statements I and II together are necessary to answer the question.

Q108. What is the code of "Are regular"?
Statement I: "regular classes scheduled" is coded as "mj kl pr". "classes tomorrow are cancelled" is coded as "ui ml km mj"
Statement II: "regular exercise is important" is coded as "mo hg kl qw". "regular meetings are important" is coded as "jk ml kl mo"
(a) if the data in statement I alone are sufficient to answer the question, while the data in statement II alone are not sufficient to answer the question.
(b) if the data in statement II alone are sufficient to answer the question, while the data in statement I alone are not sufficient to answer the question.
(c) if the data either in statement I alone or in statement II alone are sufficient to answer the question.
(d) if the data given in both statements I and II together are not sufficient to answer the question.
(e) if the data in both statements I and II together are necessary to answer the question.

Q109. Five persons – A, B, C, D and E sit in a linear row and face north, but not necessarily in the same order then what is the position of E with respect to C?
Statement I: E sits second to the right of B. D sits second to the left of A. D its immediate right of C who sits second to the left of B.
Statement II: A and E are immediate neighbours. C sits third to the left of A.
(a) if the data in statement I alone are sufficient to answer the question, while the data in statement II alone are not sufficient to answer the question.
(b) if the data in statement II alone are sufficient to answer the question, while the data in statement I alone are not sufficient to answer the question.
(c) if the data either in statement I alone or in statement II alone are sufficient to answer the question.
(d) if the data given in both statements I and II together are not sufficient to answer the question.
(e) if the data in both statements I and II together are necessary to answer the question.

Q110. Statement: In an effort to combat rising air pollution levels, several city governments are implementing policies that encourage the use of electric vehicles (EVs). These measures include offering tax incentives, developing more EV charging infrastructure, and restricting the use of traditional fuel-powered vehicles in certain areas. The goal is to promote cleaner transportation options and reduce the environmental impact caused by emissions from conventional vehicles.

Which of the following assumption is in line with the context of the statement?

(a) Electric vehicles are considered a cleaner alternative to traditional fuel-powered vehicles.
(b) Public awareness about the environmental benefits of electric vehicles is growing.
(c) The high cost of electric vehicles will discourage widespread adoption, even with tax incentives.
(d) The current EV charging infrastructure is insufficient to support a large-scale shift to electric vehicles.
(e) The electricity required to charge electric vehicles will come from renewable energy sources rather than fossil fuels.

Q111. Statement: Empowering women with vocational skills has become a key focus for several organizations, aiming to improve their livelihoods and economic independence. These initiatives are designed to provide women with the tools to start small businesses, increase their employment opportunities, and contribute more actively to their communities' economic growth.

Which of the following statement is based on the statement?

I. Many organizations believe that traditional roles limit women's economic participation.
II. Women who acquire new skills are likely to have better access to economic opportunities.
III. Women can enhance their financial prospects through targeted skill development programs.
IV. Vocational training is the most effective way to boost a country's overall economy.

(a) Both I and III
(b) Both I and IV
(c) Only II
(d) Both II and III
(e) Both II and IV

Directions (112-116): Study the following information carefully and answer the given questions below:

There are eight employees A, B, C, D, E, F, G and H working in a company at different designations: CEO, Vice President (VP), Senior Manager (SM), Manager, Assistant Manager (AM), Junior Officer (JO), Clerk and Trainee. Each employee plays a different sport: Football, Cricket, Basketball, Hockey, Tennis, Badminton, Chess and Volleyball. The designations are ranked in order with CEO being the senior-most and Trainee being the junior-most. All the information is not necessarily in the same order.

The one who plays Badminton is designated just junior to D. A and G don't play Tennis and Hockey. Three designations are between C and the one who plays Basketball. E is two designations junior to the person who plays basketball. C and E are not designated as the junior-most person and senior person. The number of persons senior to E is two less than the number of persons junior to the person who plays Badminton. More than four persons are designated between D and H who plays Cricket. As many persons senior to the person who plays Cricket as junior to the person who plays Hockey. B doesn't play Badminton. The one who plays Chess is two persons senior than G. E and G don't play Football. The person designated as Assistant Manager, F and B don't play Chess.

Q112. Which among the following games B plays and how many persons are junior to B respectively?

(a) Seven, Hockey
(b) Five, Hockey
(c) Seven, Basketball
(d) Five, Basketball
(e) None of these

Q113. Which of the following pairs is correct?
(a) A – Senior Manager
(b) G - Clerk
(c) C - Clerk
(d) C – Junior Officer
(e) E – Manager

Q114. Which of the following statement is incorrect as per the given information?
(a) D is the designated as the CEO and plays Basketball
(b) F is designated junior to E.
(c) The person designated as Manager plays Chess.
(d) Four designations are there between F and G.
(e) All are incorrect

Q115. Which among the following is the designation of the person who plays Volleyball?
(a) Clerk
(b) Junior Officer
(c) Senior Manager
(d) Vice President
(e) Assistant Manager

Q116. How many designations are there between A and the one who plays Football?
(a) As many persons designated junior to the person who plays Tennis
(b) As many persons designated senior to the person who plays Hockey
(c) As many persons designated between F and C
(d) Four
(e) As many persons designated between E and H

Q117. Seven boxes – P, Q, R, S, T, U and V are arranged one above the another, but not necessarily in the same order. There are four boxes between Box Q and Box V. Box V is placed immediately above Box P. There are two boxes placed between Box P and Box U. Box T is placed below Box U. Box R is placed above Box S which is not placed at fourth position from the bottom. Which box is placed four boxes below Box S?
(a) T
(b) Q
(c) P
(d) V
(e) None of these

Q118. If in the given word "LONGITUDE" letters that comes after M in English Alphabetical are changed with just preceding and if the letters that comes before M in English Alphabetical Series are changed with its just succeeding letter, then all the alphabets are arranged in reverse alphabetical order from left, then find the sum of place value of the letter which is third from the right end and left end in the new arrangement?
(a) 27
(b) 22
(c) 29
(d) 23
(e) 32

Q119. Statement: As global labor shortages, particularly in sectors like construction, persist, companies are increasingly turning to immersive training environments. These technologies aim to enhance workers' skills efficiently, reduce onboarding time, and help close the gap between the demand for skilled labor and the available workforce.
Which of the following course of action is in-line with the statement?
I. Focus on increasing tax incentives for large corporations to promote economic growth.
II. Collaborate with tech providers to introduce VR-based simulations for on-site construction training.
III. Implement immersive training environments to quickly upskill workers in sectors facing shortages.
(a) Only II
(b) Only I
(c) Both II and III
(d) Only III
(e) Both I and II

Q120. 6G connectivity is in development, with technologies like Reconfigurable Intelligent Surfaces (RIS) expected to optimize wireless communications and support emerging tech like autonomous vehicles. Which of the following courses of action should be taken to support this advancement?
I. Encourage investment in RIS infrastructure to improve wireless communication efficiency and enable widespread adoption of 6G technology.
II. Increase funding for traditional 5G networks to strengthen the current communications infrastructure instead of focusing on 6G.
III. Implement policies to limit the use of autonomous vehicles until current 5G networks are more stable.
(a) Only II
(b) Only III
(c) Only I
(d) Both II and III
(e) Both I and II

Q121. Statement: To combat climate change, many countries are accelerating investments in renewable energy and sustainable technologies. A recent focus is on developing hydrogen fuel cells for clean energy production and storage, aiming to reduce reliance on fossil fuels and decrease greenhouse gas emissions.
Which of the following courses of action is the most suitable to support the statement's objective of advancing hydrogen fuel cell technology as a solution to climate change?
(a) Governments should provide tax incentives and grants to companies investing in hydrogen fuel cell technology to encourage faster adoption.
(b) Encourage immediate investments in nuclear energy plants, as they provide a steady power supply, which could help bridge current energy gaps.
(c) Limit the production of electric vehicles until a more efficient energy source than lithium-ion batteries are available.
(d) Increase subsidies for coal mining companies to keep energy prices low and ensure energy availability during the transition to renewable sources.
(e) Prioritize funding for urban transportation projects over renewable energy initiatives, focusing on improving road and rail infrastructure instead.

Directions (122-126): A word and number arrangement machine, when given an input line of words and numbers, rearranges them following a particular rule in each step. Below is an example of input and its rearrangement:
Input: 97 wisdom 64 amplify 38 justice 71 clarity 25 mystery
Step I: 52 97 64 amplify 38 justice 71 clarity mystery modsiw
Step II: 83 52 97 64 amplify justice 71 clarity modsiw yretsym
Step III: 17 83 52 97 64 amplify clarity modsiw yretsym ecitsuj
Step IV: 46 17 83 52 97 amplify modsiw yretsym ecitsuj ytiralc
Step V: 79 46 17 83 52 64 modsiw yretsym ecitsuj ytiralc yfilpma

Based on the above example where Step V is the last step, find the arrangement for the below input and answer the related questions:
Input: 45 courage 86 understand 31 venture 32 meticulous 42 explore

Q122. Find the sum of the numbers which are second from the right end and third from left end in Step IV?
(a) 63
(b) 36
(c) 131
(d) 77
(e) None of these

Q123. Which element is eighth from the left end in Step III?
(a) 86
(b) erutnev
(c) suolucitem
(d) courage
(e) None of these

Q124. In which among the following step "86 42 explore erutnev" is present in same manner?
(a) Step I
(b) Step II
(c) Step IV
(d) Step III
(e) Step V

Q125. Which of the following element is second to the left of fourth element from right end in the last step?
(a) 54
(b) 23
(c) suolucitem
(d) erutnev
(e) 13

Q126. What is the difference between the place values of second letter of both second and fifth word from left end in step V?
(a) 12
(b) 11
(c) 10
(d) 14
(e) None of these

Q127. Seven persons – M, N, O, P, Q, R and S go to mall (but not necessarily in the same order) on seven different days of the week starting from Monday to Sunday. S goes to mall after P but immediately after O. More than three persons go to mall between Q and O. Q goes to mall immediately after M but M doesn't go to the mall on Friday. Two person goes between P and N. N doesn't go to the mall on Monday. Who among the following persons goes to the mall on Thursday?
(a) O
(b) P
(c) N
(d) M
(e) R

Directions (128-130): Study the following information carefully and answer the given questions.
In certain coding language, the directions are coded as per below conditions.
X@Y means – X is North of Y
X%Y means – X is South of Y
X#Y means – X is East of Y
X$Y means – X is West of Y
@ and $ means the distance between the two points is either 4m or 8m.
% and # means the distance between the two points is either 3m or 7m.
XY > WZ Means the distance between point X and point Y is greater than that of point W and point Z.
Example: A @ B and A $ B means A is north of B and A is west of B respectively and the distance between A and B is either 4m or 8m and so on.
Condition:
D#E, F%E, G@I, H#I, G$F, H@K, L#K, DE > KL, GI < GF, IH = KL

Q128. What is the direction of point E with respect to Point I?
(a) North-west
(b) South
(c) South-west
(d) North-east
(e) None of these

Q129. What is the shortest distance between Point I and Point K?
(a) 13m
(b) 8m
(c) 73m
(d) 113m
(e) Can't be determined

Q130. How far (total distance) and in which direction is Point I with respect to Point F?
(a) 12m, North-east
(b) 10m, South-east
(c) 12m, South-west
(d) 8m, South
(e) None of these

Q131. Neural technology in headphones is advancing rapidly, enabling non-invasive brain control for tasks like web browsing and gaming. This innovation could transform how users interact with devices, offering hands-free control through brainwave sensors, enhancing convenience and accessibility.
Which of the following arguments is the strongest in support of the claim that neural technology in headphones will revolutionize user interaction with devices?
I. Neural technology in headphones is interesting, but many new technologies don't achieve mass adoption.
II. Neural headphones allow hands-free control, improving convenience and accessibility for all users, especially those with mobility issues.
III. While neural headphones are innovative, they might be expensive, limiting their use to a small group.
(a) Only I
(b) Only II
(c) Only III
(d) Both I and II
(e) Both II and III

Q132. Several global tech companies are investing heavily in the development of biodegradable electronics, aiming to address the growing issue of electronic waste, which poses significant environmental risks. What could be a possible reason for the increased focus on biodegradable electronics?
(a) There is a lack of demand for conventional technology.
(b) Consumers prefer products that break down quickly.
(c) Traditional electronics no longer meet industry standards.
(d) Companies want to produce cheaper products for a larger profit margin.
(e) Governments are enacting stricter rules on waste disposal, encouraging eco-friendly solutions.

Q133. If we use the following alphabets from the words given in the options below:
The first vowel from the left end in the first word,
The third consonant from the right end in the second word,
The letter immediately after the vowel from the left end in the third word,
The first consonant from the left end in the fourth word,
The letter immediately before vowel from the right end in the fifth word, then which of the following options can form at least two meaningful words?
(a) Plate, Sword, Crate, Fresh, Mend
(b) Brain, Scope, Misty, Drift, Hope
(c) Stain, Bread, Flash, Crack, Line
(d) Frost, Blind, Smoke, Patch, Leaf
(e) None of these

Directions (134-137): Study the following information carefully and answer the questions given below:
Series 1: 1 & I @ 4 % D 9 ~ G 2 # K * 5 T $ 7 Q 3 P 6 J H 8 M S ^
Series 2: % T 5 K 7 B # 9 F Ψ G 3 P ! L 1 H * Q 8 S 4 V ^ R & J 6
Series 3: 7 F O # Q 9 B 3 L @ R 1 K $ A 8 Y Ψ H 4 G M @ N 2 % S
STEP I: The alphabets which are immediately succeeded by a symbol will change to its second succeeding letter
STEP II: The digits which are immediately preceded and immediately followed by a letter are changed with the letter of its place value according to English Alphabetical order.
STEP III: The alphabets which are immediately followed by a number and immediately preceded by a symbol are changed to its opposite letter according to English Alphabetic Series.
(Note: STEP II is applied after STEP I, STEP III is applied after STEP II)

Q134. What is the product of all the even digits which are immediately preceded by letters in step I of Series 3?
(a) 92
(b) 64
(c) 24
(d) 36
(e) None of these

Q135. How many letters are present in Step III of Series 3 which are immediately preceded by a symbol and immediately followed by a letter?
(a) Five
(b) Six
(c) Four
(d) Three
(e) Two

Q136. How many letters are immediately followed and immediately preceded by a symbol in Step II of Series I?
(a) One
(b) Two
(c) Three
(d) None
(e) Four

Q137. What is the sum of second number from the right end in Step III of all the series?
(a) 15
(b) 17
(c) 20
(d) 16
(e) 21

Q138. In the word 'BIODEGRADABLE', if all the consonants are replaced with their 4th succeeding letter and all the vowels are replaced with their next letter according to the alphabetical series, then remove the repeated letters. Now, find the multiplication of the numerical value of the remaining letters?
(a) 1452
(b) 1936
(c) 2420
(d) 1760
(e) None of these

Q139. To increase productivity, a company plans to implement flexible work hours for its employees, allowing them to choose their start and end times within a set range. Which of the following assumptions is implicit in the given statement?
I. Flexible work hours will help employees manage their work-life balance better, potentially increasing productivity.
II. The company assumes that employees will use flexible hours responsibly without compromising work quality.
III. Flexible work hours are always more effective than traditional fixed schedules in boosting employee productivity.
(a) Only III
(b) Only I
(c) Both II and III
(d) Both I and II
(e) All I, II and III

Q140. With the rise in cyber threats, a large financial institution plans to increase investment in advanced cybersecurity measures to protect customer data and maintain trust. Which of the following assumptions is implicit in the given statement?
I. Cyber threats are more concerning for financial institutions than for other industries.
II. Customers will avoid doing business with the financial institution if they perceive their data as vulnerable.
III. Advanced cybersecurity measures are essential for protecting sensitive financial data.
(a) Only I
(b) Only II
(c) Both I and III
(d) Only III
(e) All I, II and III

Directions (141-145): Read the following pie chart and table carefully and answer the questions given below. The pie chart shows the percentage distribution of total number of unsold toys (metallic and plastic) by four (A, B, C and D) different companies. The table shows the difference between the metallic and plastic toys sold by these four companies.

Note: (i) Total toys (metallic and plastic) manufactured by A, B, C and D are 40, 33, 25, and 38 respectively.
(ii) Metallic sold are more than plastic toys sold by each company.
(iii) Total toys manufactured = Total toys (metallic and plastic) sold + total toys unsold (metallic and plastic)

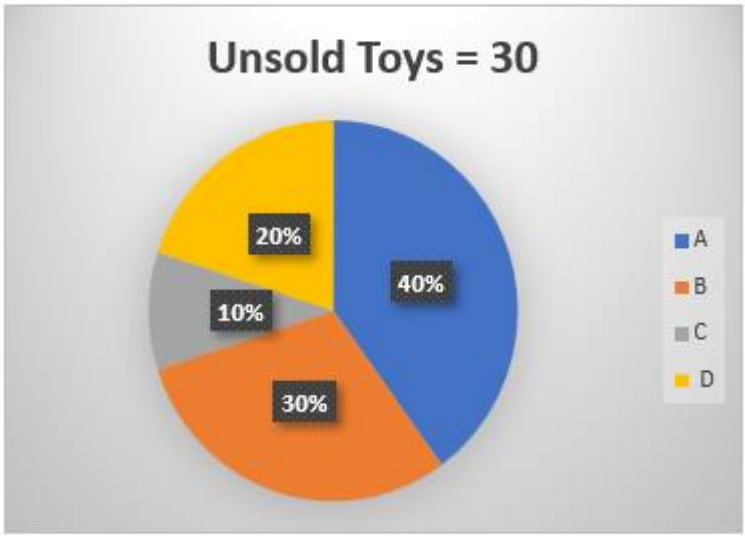

Companies	Difference between the metallic and plastic toys sold
A	2
B	12
C	3
D	5

Q141. Find the difference between the total number of metallic toys sold by A and C together and the total number of unsold toys by B and D together.
(a) 11
(b) 14
(c) 12
(d) 15
(e) 18

Q142. The total number of toys manufactured by E is 40% more than that of C and the total toys sold by E is half of the total toys sold by C and D together. The total unsold toys by E is what percentage more or less than the total plastic toys sold by C?
(a) 5%
(b) 10%
(c) 1.5%
(d) 2.5%
(e) 0%

Q143. Total number of unsold metallic toys by D is 10% of the total number of metallic toys sold by same company. Find the difference between the total number of plastic toys (sold and unsold) manufactured by D and the total number of toys sold by A.
(a) 12
(b) 11
(c) 10
(d) 14
(e) 13

Q144. Find the ratio of the total number of plastic toys sold by A and D together to the total number of toys unsold C and B together.
(a) 29:12
(b) 28:15
(c) 27:11
(d) 23:19
(e) 21:17

Q145. The average number of toys sold by C and the plastic toys sold by A is what percentage of the total metallic toys sold by D?
(a) 50%
(b) 75%
(c) 80%
(d) 66.67%
(e) None of these

Directions (146-148): Find the pattern of the series and answer the question given below.
Series: X, 168, 172, 145, Y, Z

Q146. Find the 8th term of the series.
(a) 271
(b) -324
(c) -271
(d) 324
(e) -218

Q147. Which of the following statement/s is are correct.
(i) X is greater than Y
(ii) Z is square of even number
(iii) X is less than Z
(a) All (i), (ii) & (iii)
(b) Both (ii) & (iii)
(c) Both (i) & (iii)
(d) Both (i) & (ii)
(e) Noe of the above

Q148. Find the Sum of the Y and Z.
(a) 182
(b) 167
(c) 197
(d) 198
(e) 209

Q149. A man invested Rs 5000 in a scheme which offers simple interest at 12% p.a. for 't' years, and he invested an amount which is equals to the double of the interest received from the first scheme at 15% p.a. for 5 years in another scheme. If the amount received from the second scheme is Rs 6300, then find 't'
(a) 6
(b) 1
(c) 2
(d) 4
(e) 3

Q150. 200-meter-long train A can cross a pole in 8 seconds, and train B can cross a 150-meter-long platform in 25 seconds. The difference between the lengths of trains A and B is 150 meters (length of train B > length of train A). Find the time taken by the train to cross each other while running in the in the opposite direction.
(a) 135/11 seconds
(b) 119/12 seconds
(c) 111/16 seconds
(d) 120/7 seconds
(e) 110/9 seconds

Directions (151-154): Read the following table carefully and answer the questions given below. The table shows the ratio of the number of pens to the number of sharpeners in three boxes and the difference between the probability of picking a pen and the probability of picking an eraser in these boxes. The table also shows the total number of sharpeners and erasers in these boxes.

Boxes	Pens: Sharpeners	Difference between the probability of picking a pen and the probability of picking an eraser	Total number of sharpeners and erasers
A	4:3	2/9	10
B	3:4	3/17	11
C	3:2	1/11	13

Note: Number of pens in each box is more than the number of erasers.

Q151. Find the ratio between the total number of erasers in C and B together to the number of pens in A.
(a) 1:3
(b) 4:5
(c) 5:4
(d) 3:2
(e) 5:3

Q152. The number of sharpeners in A is P times that of erasers, and the number of pens in B is Q times that of erasers. Find which of the following statement/s is/are correct.
I. P > Q
II. 4P = 3Q
III. Q : P = 4 : 3
(a) Both I & II
(b) All I, II & III
(c) Only II
(d) Both II & III
(e) Only I

Q153. Find the total number of sharpeners in all the boxes together.
(a) 22
(b) 14
(c) 18
(d) 15
(e) 20

Q154. If the average number of pens, sharpeners and erasers in A is X, then find which of the option is correct about X.
(a) X is an even number
(b) X is a perfect number
(c) Both (a) & (b)
(d) X > 8
(e) X is an odd number

Directions (155-157): Find the pattern of the series and answer the question given below.
Series I: 8, 9, 17, 52, 25A+7, 1036, B

Q155. Find which of the statement/s is/are correct.
(i) B/113 + A > 67
(ii) $\sqrt{B+26} = 79$
(iii) A is completely divisible by first term of the series I.
(a) All (i), (ii) & (iii)
(b) Both (i) & (iii)
(c) Only (iii)
(d) Both (i) & (ii)
(e) None of the above

Q156. Find the value of B.
(a) 6615
(b) 6516
(c) 6115
(d) 5215
(e) 6215

Q157. A+5 is the first term of the series II, which follows the same pattern as series I, then find the fourth term of the series II.
(a) 27
(b) 82
(c) 327
(d) 1636
(e) 89

Directions (158-162): In each of these questions, two equation (I) and (II) are given. You have to solve both the equations and give answer.

Q158. I. $5x^2 + 6x + 1 = 0$
II. $100y^2 + 25y + 1 = 0$
(a) If x > y
(b) If x ≥ y
(c) If x < y
(d) If x ≤ y
(e) If x = y or no relation can be established between x and y

Q159. I. $2x^2 - 17x + 21 = 0$
II. $y^2 - 16y + 64 = 0$
(a) If x > y
(b) If x ≥ y
(c) If x < y
(d) If x ≤ y
(e) If x = y or no relation can be established between x and y

Q160.
I. $x^2 - 3x + 2\frac{2}{9} = 0$
II. $y = \sqrt{\sqrt{\frac{2401}{625}}}$
(a) If x > y
(b) If x ≥ y
(c) If x < y
(d) If x ≤ y
(e) If x = y or no relation can be established between x and y

Q161.
I. $x^2 - 1\frac{3}{10}x + \frac{21}{50} = 0$
II. $y^2 - 1\frac{4}{5}y + \frac{4}{5} = 0$
(a) If x > y
(b) If x ≥ y
(c) If x < y
(d) If x ≤ y
(e) If x = y or no relation can be established between x and y

Q162. I. $4x^2 - 81 = (8-5)x^2$
II. $y^2 + 11y + 14 + 9y = -86$
(a) If x > y
(b) If x ≥ y
(c) If x < y
(d) If x ≤ y
(e) If x = y or no relation can be established between x and y

Q163. P can complete 50% of work in 4 days, and P & R started the work together. After two days, they left, and Q joined the work, and Q completed the remaining work in three days. If the time taken by Q to complete the whole work is four days more than that of P, then in how many days R alone can complete the whole work?
(a) 4
(b) 6
(c) 2
(d) 7
(e) 10

Q164. Profit earned while selling two diamonds is the same as the cost price of four diamonds. If the ratio between the marked price and the selling price of the diamond are 6:5, respectively, then find the ratio of the marked price and the cost price of the diamond. (Note: The cost price, selling price, and marked price of each diamond are uniform.)
(a) 12:5
(b) 5:18
(c) 18:5
(d) 10:7
(e) 24:5

Q165. The time taken by a boat to cover D km downstream is 4 hours more than the time taken by the boat to cover D-116 km upstream. The ratio of the speed of the boat in still water to the speed of the current is 9:2, respectively. If the time taken by the boat to cover 176 km downstream in 8 hours, then find the time taken by the boat to cover D-60 km upstream.
(a) 6.5 hours
(b) 8 hours
(c) 7.5 hours
(d) 8.4 hours
(e) 9 hours

Q166. Rs X is distributed amongst P, Q, R, S, and T. The total amount received by P and Q together is Rs 500 more than that of R, and the total amount received by R and S together is Rs 1600 more than that of T. If the total amount received by S is Rs 600 more than that of T and the ratio of the total amount received by R and T is 5:3, respectively, then find the value of X.
(a) 4600
(b) 4700
(c) 4500
(d) 3900
(e) 4300

Q167. A and B started a business with investments of Rs 520 and Rs (640+x) respectively. After six months, B withdrew Rs (2x - 40), and at the end of the year, the profit-sharing ratio of A to B is 26:3, respectively. Find x.
(a) 20
(b) Can't be determined
(c) 45
(d) None of these
(e) 60

Q168. In X liters mixture of milk and water, quantity of water is 40%. If 20 liters mixture are taken out and X/2 liters of milk are added in the mixture, then the ratio of milk to water in the resultant mixture becomes 43:12 respectively. Find X.
(a) 40
(b) 20
(c) 25
(d) 50
(e) 60

Directions (169-174): What approximate value will come in place of question mark (?) in the following questions? (You are not expected to calculate the exact value)

Q169. $18.02\times6.02^2-112.03=?\times3.98$
(a) 127
(b) 142
(c) 134
(d) 119
(e) 153

Q170. $11.02 \times 1.99^2 + 87.98 \div \sqrt{5} = ?$
(a) 67
(b) 98
(c) 88
(d) 73
(e) 54

Q171. $\sqrt{15} + \sqrt{36.01} \times \sqrt{49.03} = ?$
(a) 59
(b) 19
(c) 23
(d) 41
(e) 46

Q172. $2.99 \times 4.99 + 7.02 \times 8.02 - 626^{\frac{1}{4}}$
(a) 109
(b) 29
(c) 43
(d) 66
(e) 88

Q173. $78.22+15.99\times1.98^2-106.03=?^2$
(a) 2
(b) 1
(c) 12
(d) 8
(e) 6

Q174. $81.03\div9.02+4.78^2-27.011=\sqrt{?}$
(a) 25
(b) 36
(c) 16
(d) 81
(e) 49

Directions (175-180): Read the following bar graph carefully and answer the questions given below. The bar graph shows the total number of people who votes in two different years in four different cities.

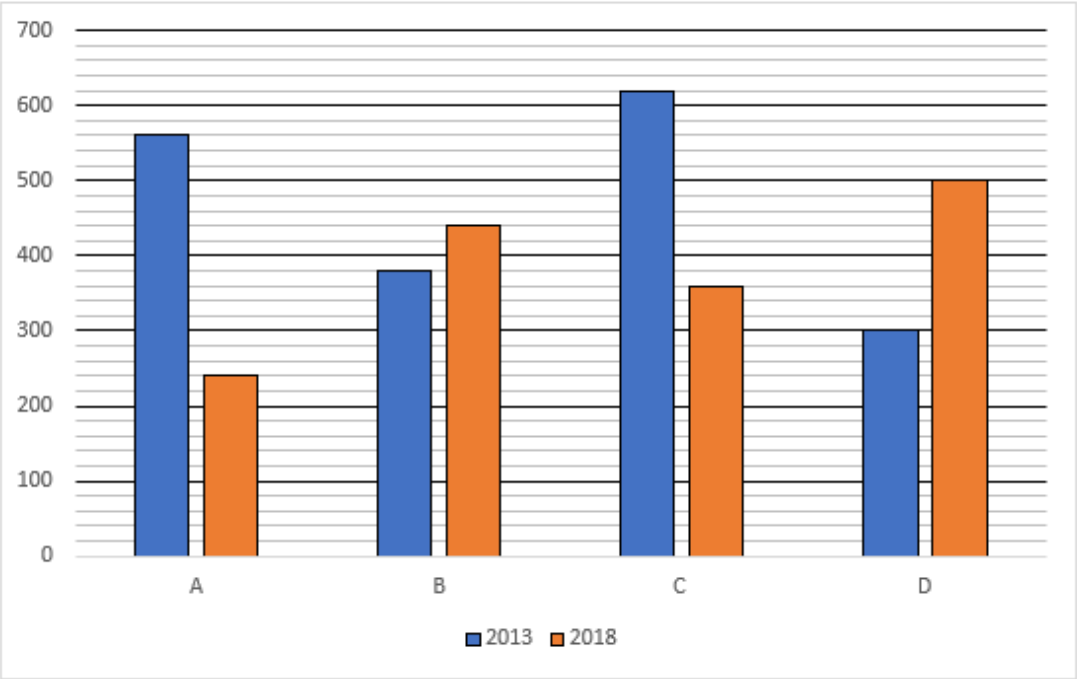

Q175. In 2013, 20% of the total number of people who vote in city C were invalid, and the ratio of total invalid votes in city D to city C was 7:4, respectively. Find the difference between the total number of people who vote in cities C and D which are valid votes.
(a) 456
(b) 452
(c) 432
(d) 413
(e) 409

Q176. In 2018, the ratio of total males to total females who vote in city A was 5:7, respectively. 3/8th of the total number of people who vote in city A were invalid. If the total number of females valid votes is 50% of the total number of valid votes, then find the difference between the total number of male valid and invalid votes in city A.
(a) 50
(b) 25
(c) 75
(d) 10
(e) 80

Q177. If the difference between the total number of people who vote in city B in 2018 and the total number of people who vote in 2013 in city D is X, then find which of the following statement/s is/are correct about X.
I. X > 120
II. X < 150
III. X = Total number of people who votes in city A in 2018
(a) Both I & III
(b) All I, II & III
(c) Both I & II
(d) Only I
(e) None

Q178. The total number of people who vote in city E in 2013 was 25% more than the average number of people who votes in cities C and A in 2018. If 66.67% of the total number of people who vote in city E in 2013 are valid, then find the total number of invalid votes in city E in 2013.
(a) 135
(b) 120
(c) 125
(d) 150
(e) 105

Q179. The total number of people who vote in city A in 2020 is 3/5th of the total number of people who votes in 2013 in city D. If the ratio of males to females who vote in city A in 2020 is 5:4, respectively, then the total number of females who vote in city A in 2020 is what percentage of the total number of people who vote in 2018 in city D?
(a) 15%
(b) 12%
(c) 20%
(d) 24%
(e) 16%

Q180. Find the ratio of the difference between the total number of people who votes in cities D and A in 2013 and the average number of people who votes in cities in B and C in 2018.
(a) 11:19
(b) 13:20
(c) 12:23
(d) 17:21
(e) 10:17

Directions (181-182): Read the following information carefully and answer the questions given below.
The average of total items manufactured in 2021 and 2022 by A, B, and C is 1500 and 1650, respectively. 20% and 1/5th of the total items manufactured in 2021 and 2022, respectively, by B. Total items manufactured by C in 2021 are 33.33% more than that of B, and the total items manufactured by A in both years are 4000.

Q181. Find the difference between the total items manufactured by C in both years and the total items manufactured by A in 2022.
(a) 1960
(b) 2340
(c) 1450
(d) 1880
(e) 1920

Q182. Total items manufactured by B in 2022 is what percentage of the total items manufactured by C in 2021?
(a) 77.5%
(b) 82.5%
(c) 87.5%
(d) 66.67%
(e) 62.5%

Directions (183-187): Read the following information carefully and answer the questions given below. The information about a company conducted interviews over three consecutive days i.e. Monday, Tuesday, and Wednesday for various role.

Total candidates (males and females) interviewed on these three days are 420. The ratio of male candidates interviewed on Monday to the female candidates interviewed on Tuesday is 4:3, and the female candidates interviewed on Monday are 10 less than that on Tuesday. Total candidates (males and females) interviewed on Tuesday are 190, and male candidates interviewed on Wednesday are 20% more than the female candidates interviewed on Monday. The average number of male candidates interviewed on Monday is 90.

Q183. Find the ratio of the total female candidates interviewed on Wednesday to the total male candidates interviewed on Monday.
(a) 4:1
(b) 3:4
(c) 1:3
(d) 2:1
(e) 1:2

Q184. Total female candidates interviewed on Tuesday is what percentage more or less than the total candidates (males and females) interviewed on Wednesday?
(a) 25%
(b) 32.5%
(c) 40%
(d) 66.67%
(e) 33.33%

Q185. Find the difference between the male candidates interviewed on Wednesday and the female candidates interviewed on Monday.
(a) 8
(b) 5
(c) 14
(d) 10
(e) 25

Q186. 20% of the total male candidates interviewed on Tuesday are rejected and 35% of the female candidates interviewed on Tuesday are selected, then find the total candidates (males and females) who are selected on Tuesday.
(a) 145
(b) 110
(c) 125
(d) 130
(e) 100

Q187. Total candidates (males and females) interviewed on Monday is how many more or less than the total female candidate interviewed on all three days.
(a) 15
(b) 10
(c) 20
(d) 30
(e) 40

Directions (188-190): The following questions are accompanied by three statements (I), (II), and (III). You have to determine which statement(s) is/are sufficient /necessary to answer the questions.

Q188. What is speed of boat in still water?
I. Speed of stream is two-third of speed of boat in still water
II. The boat covers 20 km in 2 hours in downstream
III. The boat covers 10 km in 5 hours in upstream.
(a) only statement II is sufficient
(b) Any two are sufficient
(c) I and II or III are sufficient
(d) Only statement III is sufficient
(e) None of these

Q189. What was the amount of profit earned?
I. If no discount is given, profit would be 40%
II. 30% discount is offered on marked price.
III. Selling price is more than cost price by 40%.
(a) Only III
(b) All I, II and III
(c) Only II and III
(d) Cannot be answered even including all statement
(e) Only I and III

Q190. What is speed of train?
I. The train crosses 300 m long platform in 45 seconds.
II. The train crosses another stationary train of same length in 60 seconds.
III. The train crosses a single pole in 30 seconds.
(a) I and II or III
(b) Only I
(c) II and III both
(d) Only III
(e) I and II both

Solutions

S1. Ans.(c)
Sol. The Reserve Bank of India (RBI) has approved Tata Capital Limited's (TCL) conversion into **an NBFC-investment credit company (ICC)** from its previous NBFC-core investment company (CIC) structure.
Details-
- **Merger**: This conversion follows TCL's merger with Tata Cleantech Capital and Tata Capital Financial Services.
- **Significance**: The change reflects Tata Capital's transformation into an operating company, positioning it for a potential public listing.
- **Previous Structure**: Under the CIC structure, TCL primarily functioned as a holding company, which has now been altered with this change to ICC.
- **Tata Capital's Role**: The company is a financial and investment services provider, and this conversion allows for greater operational flexibility ahead of future developments like listing.

NBFC-Investment Credit Company (ICC):
- **Definition**: An NBFC-Investment Credit Company (ICC) is a type of NBFC that is primarily involved in extending credit and making investments.
- **Functions**: These companies provide loans, credit facilities, and invest in securities of other companies, acting as a lending institution while also managing investment portfolios.
- **Difference from CIC**: Unlike Core Investment Companies (CICs), which primarily hold investments in group companies, ICCs actively participate in lending and investing activities beyond their group entities.
- **Regulatory Oversight**: ICCs are subject to RBI regulations and must comply with guidelines related to capital adequacy, asset quality, and liquidity management.

S2. Ans.(c)
Sol. The **Life Insurance Corporation of India (LIC), General Insurance Corporation of India (GIC Re), and New India Assurance Company** continue to be identified as Domestic Systemically Important Insurers (D-SIIs) by IRDAI.
- **LIC**: The largest life insurance company in India, playing a crucial role in the domestic financial system.
- **GIC Re**: The only Indian reinsurer, making it systemically important due to its interconnectedness in the global and domestic insurance markets.
- **New India Assurance**: The largest general insurance company, providing essential services to the national economy.
- **D-SIIs**: These insurers are considered "too big or too important to fail" because their distress or failure could cause significant disruption to the domestic financial system. As a result, they are subject to additional regulatory measures for risk management and corporate governance to mitigate systemic risks.

S3. Ans.(e)
Sol. The letter 'B' in NBSL stands for "BHIM".
- **NBSL**: NPCI BHIM Services Ltd. is a subsidiary of NPCI, where "BHIM" refers to Bharat Interface for Money, a digital payment application that facilitates simple and quick transactions.
- **Objective**: The incorporation of NBSL is aimed at addressing the growing demand for digital payments, supporting innovation, and promoting financial inclusion.

About NPCI:
- Established in 2008 as the umbrella organization for retail payments and settlement systems in India.
- **Products:** NPCI offers a range of services, including UPI, RuPay, IMPS, and BHIM, to promote secure and efficient digital payments.
- **Mission:** NPCI is focused on driving India toward a fully digital economy by providing affordable, accessible payment infrastructure.

S4. Ans.(a)
Sol. The **World Bank** has approved a $1.5-billion loan to help India accelerate its low-carbon energy development.

Details-

- **Funding Objective**: The funds will promote green hydrogen, electrolysers, and increased renewable energy penetration in India.
- **Series of Operations**: This is the second round of funding under the "Low-Carbon Energy Programmatic Development Policy Operation". The first round of $1.5 billion was approved in June 2023.
- **India's Goals**: The funding aligns with India's targets of achieving 500 GW of renewable energy capacity by 2030 and reaching net zero by 2070.
- **World Bank's Role**: The loan will support reforms in green hydrogen production, renewable energy integration, and the development of a national carbon credit market.

S5. Ans.(c)

Sol. The previous threshold for bulk fixed deposits was **₹2 crore**, which has now been increased to ₹3 crore by the RBI.

- **Bulk Deposits**: These deposits earn slightly higher interest rates as banks use them for managing liquidity.
- **Revised Definition**: Bulk deposits are now defined as "Single Rupee term deposits of ₹3 crore and above" for Scheduled Commercial Banks (excluding RRBs) and Small Finance Banks.
- **Local Area Banks**: The bulk deposit limit for Local Area Banks and Regional Rural Banks is set at ₹1 crore.
- **RBI's Policy Update**: This revision was announced during the bi-monthly monetary policy review in June 2024 to streamline the classification of deposits.

S6. Ans.(d)

Sol. The Government of India recently signed a $200 million loan with the **Asian Development Bank (ADB)** to improve solid waste management and sanitation in 100 cities across eight states.

Details-

- **Purpose**: The loan is aimed at enhancing sanitation and solid waste management infrastructure under the Swachh Bharat Mission 2.0 - Comprehensive Municipal Waste Management in Indian Cities Program.
- **Focus Areas**: The loan will support waste segregation, collection, disposal, the construction of bio-methanation and composting plants, and the establishment of plastic waste processing facilities.
- **Additional Support**: The loan also includes funding for community toilets, urinals, and sweeping equipment, ensuring that services are climate- and disaster-resilient, with a focus on gender equality and social inclusion.

About Asian Development Bank (ADB):

- **Established**: 1966, headquartered in Manila, Philippines.
- **Mission**: To promote economic development in the Asia-Pacific region.
- **Members**: 68 countries, including India.
- **Focus Areas**: Infrastructure, poverty reduction, and sustainable development.
- **India's Partnership**: A key partner in India's development projects, including urban infrastructure and energy.

S7. Ans.(c)

Sol. The headquarters of the Financial Action Task Force (FATF) is located **in Paris, France.**

Key Details about FATF:

- **Membership**: FATF has 40 members, which include 38 jurisdictions and 2 regional organizations (the Gulf Cooperation Council and the European Commission).
- **Mission**: The FATF plays a crucial role in combating money laundering, terrorist financing, and other financial crimes on a global scale.
- **Global Partnerships**: In addition to its core members, FATF collaborates with 31 international and regional organizations that act as Associate Members or Observers, contributing to its global initiatives.
- **Impact**: FATF's recommendations form the backbone of international efforts to secure financial systems. Countries that fail to comply with these recommendations may be placed on grey or black lists.
- **Role in Financial Security**: FATF's efforts help ensure that illegal financial activities do not destabilize economies, supporting global financial integrity and security.

S8. Ans.(c)
Sol. The theme for India's first National Space Day, celebrated on August 23, 2024, was **"Touching Lives while Touching the Moon: India's Space Saga."**
Details-
- **National Space Day**: August 23, 2024, was designated as India's first National Space Day to celebrate the successful landing of Vikram Lander on August 23, 2023, from the Chandrayaan-3 mission.
- **Theme Significance**: The theme reflects how India's advancements in space exploration, especially with the Chandrayaan-3 mission, have touched not only the Moon but also lives on Earth by contributing to science, technology, and society.
- **Chandrayaan-3 Success**: On August 23, 2023, India became the fourth nation to successfully land on the Moon and the first to do so in the southern polar region.

S9. Ans.(b)
Sol. The updated per transaction limit for UPI Lite has been increased to **₹1,000.**
- **UPI Lite Per Transaction Limit**: The limit has been raised from ₹500 to ₹1,000, making it easier for users to conduct small-value transactions swiftly and efficiently.
- **UPI Lite Wallet Limit**: The total wallet limit for UPI Lite has also increased, going from ₹2,000 to ₹5,000.
- **Purpose**: These enhancements are aimed at promoting the further adoption of UPI by making it more accessible and user-friendly for small, everyday transactions.
- **UPI 123Pay**: In addition, the RBI has raised the per transaction limit for UPI 123Pay from ₹5,000 to ₹10,000, further broadening its usability for feature phone users.
- **Impact**: UPI continues to revolutionize India's financial landscape, promoting digital payments and financial inclusion, particularly with ongoing innovations like UPI Lite and UPI 123Pay.

S10. Ans.(e)
Sol. China is not ranked in the top 5 most competitive economies in the world in 2024.
- **Top 5 Economies in 2024**:
  1. Singapore
  2. Switzerland
  3. Denmark
  4. Ireland
  5. Hong Kong SAR
- **India's Rank**: India has improved its position in the Global Competitiveness Index, ranking 39th in 2024, up from 43rd in 2020.
- **China's Position**: Although China is recognized as a key player in trade, investment, and innovation, it does not feature in the top 5 economies in 2024.
- **Competitiveness Criteria**: The ranking evaluates countries based on four main factors: economic performance, government efficiency, business efficiency, and infrastructure.

S11. Ans.(c)
Sol. Tata Power Solar Systems Ltd (TPSSL) has signed an agreement with **ICICI Bank** to provide financing for solar units to residential and corporate customers.
Details-
- **Loan Details**: Customers can avail loans up to ₹90 lakh, with collateral-free options and a tenure of up to 5 years.
- **Higher Loan Options**: Higher loans with collateral can have tenures extending up to 20 years.
- **Collaboration Purpose**: The agreement aims to promote the adoption of solar energy by making it easier for customers to finance solar panel purchases.
- **TPSSL**: A wholly-owned subsidiary of Tata Power Renewable Energy Limited (TPREL), dedicated to providing solar energy solutions.

S12. Ans.(c)
Sol. The unique ABHA number assigned to individuals under the Ayushman Bharat Digital Mission (ABDM) consists of **14 digits.**
Details-
- **Purpose of ABHA**: This 14-digit number links and manages an individual's health records digitally, providing seamless access to healthcare services.
- **Objective**: It enables individuals to securely share their health records with healthcare professionals and service providers, ensuring informed medical decisions with their consent.
- **Portability**: ABHA is portable across various empanelled healthcare providers under the Ayushman Bharat scheme, making healthcare services accessible across locations.
- **Electronic Health Records (EHR)**: The ABHA number integrates with EHR, allowing for digital storage and retrieval of health information, such as prescriptions and lab reports.
- **ABHA Address**: Along with the ABHA number, individuals also receive an ABHA Address to access and share health records digitally in a secure manner.

S13. Ans.(c)
Sol. Maramadi, also known as Kalappoottu or Pothottam, is a traditional bull race conducted in **Kerala.**
Details-
- **Event**: This race takes place in freshly ploughed paddy fields (kandams) and is usually held after the harvest season.
- **Famous Location**: The most renowned Maramadi race is conducted at Anandhapalli village in Pathanamthitta district during the Onam festival.
- **Cultural Significance**: Maramadi attracts large crowds and is an integral part of Kerala's rich cultural heritage, celebrating rural life and community spirit.

S14. Ans.(d)
Sol. The Animal Welfare Board of India (AWBI) is headquartered in Ballabhgarh, **Haryana.**
- **Establishment**: The AWBI was established in 1962 under Section 4 of the Prevention of Cruelty to Animals Act, 1960.
- **Role**: It is a statutory advisory body responsible for promoting animal welfare and ensuring that animal welfare laws are followed in India.
- **Leadership**: The board was started under the stewardship of Late Smt. Rukmini Devi Arundale, a prominent humanitarian.
- **Structure**: The Board consists of 28 members, including 6 Members of Parliament, and advises the Government of India on animal welfare issues.

S15. Ans.(c)
Sol. The 'Karthumbi' umbrella is made by tribal women from **Kerala**, specifically from the Attappadi region in Palakkad district.
Details-
- **Launch**: The production of Karthumbi umbrellas started in 2014 to provide income opportunities for tribal women in Kerala.
- **Region**: These colourful and splendid umbrellas are produced in Attappadi, a tribal area in Kerala's Palakkad district.
- **Significance**: The initiative not only supports local craftsmanship but also empowers the tribal women economically.

S16. Ans.(c)
Sol. GAIL (India) Limited has signed a Memorandum of Understanding (MoU) with US-based Petron Scientech to explore a joint venture for setting up a bio-ethylene plant in India.

- **Project Details**: The proposed plant will have a capacity of 500 Kilo Tonne per Annum (KTA) of bio-ethylene.
- **Collaboration Objective**: GAIL and Petron will conduct feasibility studies to assess the technical and financial viability of the project.
- **Petron Expertise**: Petron specializes in setting up biomass and grain processing biorefineries for the production of bioethanol, bio-ethylene, and bio-chemicals.
- **Global Leader**: Petron commands a 90% share of the global bio-ethylene technology market.

S17. Ans.(e)
Sol. Aman Sehrawat is correctly matched with Wrestling for the Paris Olympic Games.
- **Praveen Chitravel** is associated with Triple Jump (not Weightlifting).
- **Manika Batra** is associated with Table Tennis (not Archery).
- **Bhavani Devi** is associated with Fencing (not Badminton).
- **Jeswin Aldrin** is associated with Long Jump (not Boxing).
- **Aman Sehrawat** is correctly associated with Wrestling.

S18. Ans.(c)
Sol. The dedicated mobile app offered by the Central Pension Accounting Office (CPAO) to simplify access to services for pensioners is called **"Dirghayu."**
- **Purpose**: The app simplifies access to various pension-related services.
- **Registration Process**: Users are required to enter their Pension Payment Order (PPO) number, Date of Birth, and Date of Retirement (or Date of Death for family pensioners) for registration.
- **Benefit**: It provides pensioners with easy digital access to their pension details and services, promoting convenience and efficiency.

S19. Ans.(d)
Sol. Energy is not one of the core themes of the BioE3 Policy.
- **Economy**: The policy aims to boost the bioeconomy by promoting sustainable biomanufacturing and innovation in various sectors.
- **Environment**: It focuses on reducing environmental impact through bio-based chemicals, carbon capture, and climate-resilient agriculture.
- **Employment**: The policy seeks to generate significant employment, particularly in tier-II and tier-III cities, by establishing biomanufacturing hubs.

BioE3 Policy-
Key Focus Areas: The policy emphasizes high-performance biomanufacturing, sustainable growth, and promoting a circular bioeconomy.
Employment: It aims to generate employment through biomanufacturing hubs, particularly in tier-II and tier-III cities, using local biomass.
Themes: The policy focuses on bio-based chemicals, smart proteins, precision biotherapeutics, climate-resilient agriculture, carbon capture, and futuristic marine and space biotechnology research.
Broader Goals: BioE3 aligns with national goals such as achieving 'Net Zero' and promoting the 'Lifestyle for Environment' initiative.

S20. Ans.(a)
Sol. The Reserve Bank of India (RBI) derives its authority to regulate the financial market **under the Reserve Bank of India Act, 1934.**
- This Act empowers the RBI to regulate various aspects of the financial market, including monetary policy, foreign exchange, and banking systems.
- Other Acts, like the **Banking Regulation Act, 1949**, focus on regulating the banking sector, while the **Payment and Settlement Systems Act, 2007** deals with the regulation of payment systems.

About RBI:
- **Established**: 1935 under RBI Act, 1934.
- **Regulation**: Oversees financial markets, foreign exchange, and banking.
- **Monetary Policy**: Manages inflation and currency.
- **Banking Supervision**: Regulates banks under Banking Regulation Act, 1949.
- **Payment Systems**: Oversees payments under Payment and Settlement Systems Act, 2007.

S21. Ans.(c)
Sol. Each BHISHM Cube has the capacity to handle **around 200 cases** in emergency situations.
Details-
- **BHISHM Full Form**: Bharat Health Initiative for Sahyog Hita & Maitri.
- **Medical Aid Purpose**: Provides essential medical care for injuries.
- **Operational Capacity**: Can perform 10-15 basic surgeries daily.
- **Emergency Situations**: Equipped for trauma, bleeding, burns, fractures, etc.
- **Self-sufficiency Features**: Generates limited power and oxygen.

S22. Ans.(b)
Sol. Salaried resident individuals with a maximum income of **Rs 50 lakh** within a financial year are eligible to file the ITR 1 form.
- **ITR 1 Applicability**:
  - Income source should primarily be salary or pension.
  - Income may include a single property and other sources (excluding horse racing, gambling, lotteries, etc.).
  - The taxpayer should not own property outside India.
  - No foreign income should be received.
  - Interest income from savings, deposits, and family pension is allowed.

S23. Ans.(d)
Sol. Deposit-taking HFCs are required to maintain liquid assets to the extent of **14% of public deposits** on an ongoing basis by January 1, 2025.
- **Liquid Asset Requirement**:
  - Currently, deposit-taking HFCs must maintain 13% liquid assets against public deposits.
  - By January 1, 2025, this requirement increases to 14%.
  - By July 2025, they must maintain 15% of liquid assets.
- **Repayment Tenure for Public Deposits**:
  - The RBI mandates that public deposits accepted or renewed by HFCs must now be repayable after a minimum period of 12 months and up to a maximum of 60 months.
  - Existing deposits with maturities exceeding 60 months can be repaid according to their repayment profile.
  - Previously, HFCs were permitted to accept or renew deposits for periods of up to 120 months.
- **Revised Ceiling on Public Deposits**: The permissible public deposit ceiling for HFCs has been reduced from 3 times to 1.5 times of Net Owned Fund (NoF), enhancing regulatory alignment with NBFCs.

S24. Ans.(b)
Sol. Gujarat has the highest wetland area in India.
Details-
- **Wetland Coverage**: Gujarat leads in total wetland area due to its extensive coastline and diverse ecosystems.
- **Notable Wetlands**: Includes the Nalsarovar Bird Sanctuary, Great Rann of Kutch, and Marine National Park.
- **Ecological Importance**: Supports a wide range of biodiversity, including migratory birds and unique marine life.
- **Wetland Conservation**: Gujarat has significant initiatives to protect and manage its wetland ecosystems.

S25. Ans.(e)
Sol. Russia is not among the top 5 zinc-producing countries in the world.

- **Top 5 Zinc Producers**:
  - **China**: Leading with 4.2 million metric tons.
  - **Peru**: Second, with 1.4 million metric tons.
  - **Australia**: Third, producing 1.3 million metric tons.
  - **India**: Fourth, with an output of 830,000 metric tons.
  - **United States**: Fifth among the top producers.
- **Significance**: Zinc is crucial for galvanization, alloy production, and electronics manufacturing.
- **Russian Production**: Although Russia produces zinc, its production volume is not within the top 5 global producers.

S26. Ans.(e)
Sol. The new upper transaction limit for tax payments using UPI has been raised to **₹5 lakh per transaction**.
Details-
- **NPCI Update**: The UPI transaction limit has been increased for high-value categories, effective from September 16, 2024.
- **Applicable Sectors**:
  - **Tax Payments**: Users can pay up to ₹5 lakh per transaction.
  - **Healthcare**: Verified hospitals can now accept payments up to ₹5 lakh.
  - **Educational Fees**: Educational institutions are covered under the raised limit.
  - **Financial Investments**: Applicable to IPOs, government securities, and select financial instruments.
- **Standard UPI Transactions**: The limit remains at ₹1 lakh for peer-to-peer transfers and other standard transactions.

S27. Ans.(c)
Sol. The second-largest diamond ever found, a rough 2,492-carat stone, was recently discovered in **Botswana**.
Details-
- **Mine Location**: Found at Karowe mine, approximately 500km north of Botswana's capital, Gaborone.
- **Ownership**: The mine is owned by Canadian firm Lucara Diamond.
- **Historical Context**: This is the largest diamond ever discovered in Botswana, surpassing the previous record of a 1,758-carat diamond found in 2019 at the same mine.
- **Global Ranking**: It **follows the 3,106-carat Cullinan diamond found in South Africa** in 1905, now part of the British Crown Jewels.
- **Botswana's Role**: One of the world's largest diamond producers, accounting for around 20% of global production.

S28. Ans.(c)
Sol. The RBI study shows an expected **54% increase** in total private sector investment for the current financial year compared to the previous year.
- **Investment Growth**:
  - Expected increase to ₹2.45 trillion from ₹1.59 trillion in FY24.
- **Funding Sources Considered**:
  - Bank and financial institution commitments
  - External Commercial Borrowings (ECBs)
  - Rights issues for capital expenditure
- **Investment Intentions**:
  - Total intentions by private corporations reached ₹4.03 trillion, up by 56.6% over FY23.
- **Sector-Wise Allocation**:
  - Infrastructure sector received the largest share (60%), led by:
    - Power
    - Roads and bridges
    - Ports and airports

S29. Ans.(b)
Sol. The National Payments Corporation of India (NPCI) was initially formed by a **consortium of 10 core promoter banks**.
Details-

- **Core Promoter Banks**: State Bank of India, Punjab National Bank, Canara Bank, Bank of Baroda, Union Bank of India, Bank of India, ICICI Bank Limited, HDFC Bank Limited, Citibank N.A., HSBC.
- **Incorporation and Purpose**: Established under RBI and IBA's guidance, NPCI is a "Not for Profit" entity incorporated to develop and support India's payment infrastructure.
- **Legal Foundation**: Operates under the Payment and Settlement Systems Act, 2007, enabling it to manage and oversee retail payment systems.
- **Expansion of Shareholding**:
  - In 2016, NPCI broadened its shareholder base to 56 banks, including all banking sectors.
  - In 2020, it included additional RBI-regulated entities like Payment Service Operators, payment banks, and Small Finance Banks.
- **Headquarters and Governance**: Headquartered in Mumbai, NPCI's board includes RBI nominees and representatives from core promoter banks.
- **Key Payment Systems Operated by NPCI**:
  - **National Financial Switch (NFS)**: Facilitates ATM interbank transactions.
  - **Immediate Payment Service (IMPS)**: Real-time, 24/7 money transfer.
  - **Aadhaar-enabled Payment System (AEPS)**: Enables Aadhaar-based transactions.
  - **National Automated Clearing House (NACH)**: Supports bulk payments like subsidies and salaries.
- **Innovation and Digital Payment Reach**: NPCI drives digital payment solutions in India, leveraging technology for efficient and secure transactions.

S30. Ans.(d)
Sol. The maximum annual turnover limit for Micro Enterprises is **Rs. 5 crore**.

- **Micro Enterprise Classification**:
  - **Investment in Plant and Machinery or Equipment**: Up to Rs. 1 crore.
  - **Annual Turnover Limit**: Up to Rs. 5 crore.
- **Purpose of Classification**: Helps in categorizing enterprises to provide targeted support and benefits based on size and economic capacity.
- **Comparison with Other Categories**:
  - Small Enterprises: Investment up to Rs. 10 crore; turnover up to Rs. 50 crore.
  - Medium Enterprises: Investment up to Rs. 50 crore; turnover up to Rs. 250 crore.

S31. Ans.(e)
Sol. The NSFE 2020-2025 was prepared by the National Centre for Financial Education (NCFE) in consultation with **all of the listed financial sector regulators**.

- **Consulting Regulators**:
  - Reserve Bank of India (RBI)
  - Securities and Exchange Board of India (SEBI)
  - Insurance Regulatory and Development Authority of India (IRDAI)
  - Pension Fund Regulatory and Development Authority (PFRDA)
- **Objective of NSFE**: To promote financial literacy and empowerment across diverse sections of the population, ensuring financial well-being.
- **Developed by**: The NCFE, a Section 8 (Not for Profit) company under the Companies Act, 2013, and promoted by the above regulators.

S32. Ans.(b)
Sol. Himachal Pradesh was recognized as the "Best Performer" in Category B for its support to the startup ecosystem.

- **Ranking Overview**: The 4th edition of the ranking, conducted by the Department for Promotion of Industry and Internal Trade (DPIIT) under the Ministry of Commerce and Industry, assessed 33 States and UTs.
- **Categories**: States and UTs were divided into Category A (population >1 crore) and Category B (population <1 crore).
- **Purpose of Ranking**: Part of the Start-up India initiative, aimed at creating a robust startup ecosystem by nurturing innovation and fostering entrepreneurship.
- **Objectives**:
  - Highlight progress by States/UTs in promoting startups.
  - Foster competitiveness and proactive efforts.
  - Help States/UTs learn and replicate best practices.
- **Additional Resources**: The exercise also released a National Report, a Compendium of Best Practices, and individual State Reports to support entrepreneurial growth in India.

S33. Ans.(c)
Sol. The revamped Model Skill Loan Scheme provides a guarantee against default up to **75% of the loan amount**.
- **Loan Limit Increase**: The maximum loan amount eligible for credit guarantee has been raised from INR 1.5 lakhs to INR 7.5 lakhs.
- **Scheme Objective**: To support skill development by increasing credit guarantee coverage for skill loans.
- **Expanded Network**: The lending network now includes small finance banks, with additional skill development courses covered.
- **Overseeing Ministry**: Ministry of Skills Development and Entrepreneurship.

S34. Ans.(c)
Sol. The new computational model for detecting cervical dysplasia was developed by scientists from the **Institute of Advanced Study in Science and Technology (IASST)**.
Details-
- **Purpose**: Designed for early and accurate detection of cervical dysplasia to aid in cervical cancer diagnosis.
- **Development Team**: Led by Dr. Lipi B. Mahanta at IASST, an autonomous institute under the Department of Science and Technology (DST).
- **Techniques Used**: Leveraged Non-subsampled Contourlet Transform (NSCT) and YCbCr color model for image processing.
- **Performance**: Achieved a high average accuracy of 98.02% on tested datasets.
- **Testing**: Validated on datasets from Indian healthcare centers and a publicly available dataset.

S35. Ans.(c)
Sol. The allocation for the Nirbhaya Fund in the financial year 2024-25 is **Rs 200 crore**.
- **Increase in Allocation**: The Nirbhaya Fund allocation has been doubled from Rs 100 crore in 2023-24 to Rs 200 crore in 2024-25, marking a 100% increase.
- **Overall Women Safety Schemes**: Total allocations for women safety schemes under the Ministry of Home Affairs have increased to Rs 1,105 crore, up from Rs 321 crore in the previous year.
- **Purpose of the Fund**: Established to finance projects and schemes that enhance safety and security for women across the country.
- **Historical Context**: The Nirbhaya Fund was created in response to the 2012 Delhi gang-rape case, named after the victim, and initially launched under the UPA government.

S36. Ans.(d)
Sol. There is **no age limit** for the second applicant in a joint Senior Citizen Savings Scheme (SCSS) account.
Senior Citizen Savings Scheme
- **Tenure**: 5 years, with an option to extend in blocks of 3 years.
- **Investment Limits**: Minimum of Rs. 1,000; Maximum of Rs. 30 lakh.

- **Benefits**:
  - Safe and reliable investment.
  - Higher returns compared to FD or savings accounts.
  - Tax deduction up to Rs. 1.5 lakh under Section 80C.
- **Premature Withdrawal**: Permitted with penalties up to 1.5%.
- **Eligibility**:
  - Indian citizens above 60 years.
  - Retirees aged 55-60 (VRS or superannuation) can invest within a month of retirement.
  - Retired defence personnel aged 50-60.
  - Spouse of deceased state/central government employees (if employee was 50+).
- **Joint Account**: Can only be opened with a spouse, with no age limit for the second applicant; deposit attributable only to the first account holder.
- **Exclusions**: HUFs and NRIs are not eligible.

S37. Ans.(d)
Sol. The NPS contribution limit for employers in the private sector has been raised to **14% of the employee's basic salary**.
Details-
- **Previous Limit**: Previously, the limit was 10% of the employee's basic salary.
- **Applicability**: This benefit applies to employees opting for the new tax regime.
- **Section 80CCD(2)**: The higher deduction up to 14% is applicable under this section, aimed at enhancing tax savings and building a larger pension fund.
- **Extension of Benefit**: Earlier, the 14% employer contribution was only available to central and state government employees; it is now extended to private and public sector employees.

S38. Ans.(b)
Sol. The **Employees' Provident Fund Organisation (EPFO)** is responsible for issuing the Certificate of Coverage (COC) to Indian migrant workers for social security schemes in Social Security Agreement countries.
Details-
- **Role of EPFO**: Acts as the liaison agency in India for Social Security Agreement -related matters.
- **Purpose of COC**: Certifies coverage under Indian social security schemes for workers deputed abroad to SSA countries.
- **Liaison**: EPFO coordinates with the counterpart liaison agency in SSA partner countries.
- **Benefit of COC**: Ensures social security benefits are applicable to Indian workers in SSA countries without additional contributions to foreign social security systems.

S39. Ans.(c)
Sol. The National Awards for e-Governance (NAeG) 2024 were conferred **under five categories**.
- **Award Categories**:
  1. Government Process Re-Engineering.
  2. Application of Emerging Technologies for Citizen-Centric Services.
  3. District-level initiative in e-Governance.
  4. Research on Citizen-Centric Services by Academic & Research Institutions.
  5. Replication of Top Technological solutions/initiatives.
- **Award Components**: Each award includes a trophy, certificate, and monetary incentive (Rs 10 lakh for Gold Awardees, Rs 5 lakh for Silver Awardees) to support project implementation or bridge resource gaps for public welfare initiatives.

S40. Ans.(d)
Sol. The three underwater geographical structures named by India are the Ashoka seamount, the Chandragupt ridge, **and the Kalpataru ridge**.

Details-

- **Naming Authority**: Names were awarded by the International Hydrographic Organization (IHO) and UNESCO's Intergovernmental Oceanographic Commission (IOC).
- **Historical Significance**: Ashoka and Chandragupt are named after Mauryan dynasty rulers.
- **Discovery Details**:
  - The Ashoka seamount and Kalpataru ridge were discovered in 2012 using the Russian vessel Akademik Nikolay Strakhov.
  - The Chandragupt ridge was discovered in 2020 by the Indian vessel MGS Sagar.
- **Previous Names**: India has also named other underwater structures like the Raman ridge, Panikkar seamount, and Sagar Kanya seamount in the Indian Ocean.

S41. Ans.(e)

Sol. All of the above are sources of revenue for the Consolidated Fund of India.

- **Direct Taxes**: Includes revenue from income tax and corporate tax, which significantly contribute to the fund.
- **Indirect Taxes**: Revenue from GST, customs duties, and excise duties forms a major part of indirect income.
- **Dividends and Profits**: Generated from PSUs, such as ONGC and NTPC, these funds come from dividends and profits of state-owned enterprises.
- **Government Services**: Income earned from services provided by the government, such as registration fees and other service charges.
- **Disinvestment and Loan Recoveries**:
  - **Disinvestment**: Proceeds from selling government stakes in PSUs.
  - **Loan Recoveries**: Repayments from loans given by the government to states or foreign entities.
- **About the Consolidated Fund**: Established under Article 266(1) of the Indian Constitution, the Consolidated Fund of India gathers all government revenue and is the primary account from which government expenses are made. It covers routine and essential government expenses like salaries, pensions, infrastructure, defense, and debt servicing.
- **Withdrawal Requirements**: No money can be withdrawn without parliamentary approval, obtained through Appropriation Bills, ensuring transparency and accountability.
- **State-Level Counterpart**: Each state has its own Consolidated Fund, functioning similarly with the requirement for state legislative approval for withdrawals.

S42. Ans.(b)

Sol. Sooraj R. Barjatya won the Golden Lotus (Swarna Kamal) award for Best Direction at the 70th National Film Awards for the Hindi film **Uunchai (Zenith)**. The Best Direction award includes the Swarna Kamal trophy and a cash prize of Rs. 3,00,000.

The National Film Awards honor outstanding contributions to Indian cinema across various categories, promoting excellence in the film industry. The award ceremony was held on October 8, 2024, at Vigyan Bhawan, New Delhi, with President Droupadi Murmu presenting the awards.

S43. Ans.(c)

Sol. SEBI instructed BSE to pay the differential regulatory fee on past dues **at an interest rate of 15% per annum**.

Details-

- **Reason for Differential Fee**: SEBI mandated that BSE should calculate regulatory fees based on the notional value of annual turnover rather than only the premium turnover for option contracts.
- **Interest Rate and Penalty**: A 15% annual interest applies to unpaid, delayed, or short-paid fees, calculated monthly for each delayed month.
- **Payment Breakdown**:
  - For FY22 and FY23: Payment must include the 15% interest.
  - For FY15 to FY21: SEBI allows payment in three equal installments from August 2025 to August 2027, including interest.
- **FY24 Requirement**: For the most recent fiscal year, SEBI instructed payment within 30 days, without interest, as long as it's paid on time.

S44. Ans.(b)
Sol. As of 2023, **only one foreign bank**, DBS Bank India Limited, operating under the wholly owned subsidiary (WOS) model, has been appointed as an agency bank by the RBI. This appointment allows DBS Bank India Limited to conduct government-related transactions.
Agency Banks: Includes scheduled public and private sector banks, along with this sole foreign bank operating under the WOS model.

S45. Ans.(d)
Sol. The term "**Moratorium Period**" is not related to mutual funds. It is generally used in the context of loans and refers to a period during which repayment is not required.
- **Mutual Fund Terms**:
  - **Net Asset Value (NAV)**: The per-unit price of a mutual fund.
  - **Systematic Investment Plan (SIP)**: A method of investing regularly in mutual funds.
  - **Expense Ratio**: The percentage of fund assets used for management expenses.
  - **Asset Under Management (AUM)**: The total market value of all assets managed by the fund.

S46. Ans.(c)
Sol. Under the Differential Rate of Interest (DRI) Scheme, banks provide **finance up to ₹15,000** at a concessional interest rate of 4% per annum.
Differential Rate of Interest (DRI) Scheme
- **Purpose**: The DRI Scheme aims to uplift weaker sections by offering financial assistance at a reduced rate, enabling them to pursue productive, self-employment, or income-generating activities. This concessional financing supports economic independence and financial inclusion.
- **Eligible Groups**:
  - Primarily targets Scheduled Castes (SCs), Scheduled Tribes (STs), minorities, physically handicapped individuals, and people involved in cottage and rural industries.
  - Individuals who collect forest products or fodder are also eligible, extending financial support to communities that rely on natural resources for livelihood.
- **RBI Mandate for SC/ST Allocation**: The Reserve Bank of India has instructed banks to ensure that at least 40% of DRI Scheme advances go to borrowers from SC/ST communities, reinforcing the scheme's commitment to social equity.

S47. Ans.(d)
Sol. The Self Employment Scheme for Rehabilitation of Manual Scavengers (SRMS) provides a maximum capital subsidy of **Rs. 5 lakh per beneficiary**.
- **Scheme Purpose**: SRMS aims to rehabilitate manual scavengers and their dependents into alternative professions.
- **Revision in 2021**:
  - The capital subsidy has been increased from Rs. 3.25 lakh to Rs. 5 lakh.
  - Payment of the subsidy is now upfront instead of as a back-end subsidy.
- **Additional Eligibility**: Sanitation workers and their dependents are also eligible for the same subsidy amount for sanitation-related projects.
- **Health Coverage**: Manual scavengers receive health insurance coverage of up to Rs. 5 lakh under the Ayushman Bharat Yojana.

S48. Ans.(e)
Sol. Agri-Clinics provide support **in all of the above areas**, as part of the Agri Clinic and Agribusiness Centres (ACABC) Scheme.
- **Areas Supported**:
  - **Soil Health**: Assistance in improving soil quality.
  - **Cropping Practices and Plant Protection**: Guidance on optimal cropping methods and pest management.
  - **Crop Insurance**: Information and assistance regarding crop insurance policies.

- **Post-Harvest Technology**: Advice on handling and storing crops after harvest.
- **Animal Clinical Services**: Support in animal care, feed, and fodder management.
- **Market Prices**: Updates on the prices of various crops to help farmers make informed decisions.

- **Objective**: The ACABC scheme aims to increase agricultural productivity, create self-employment, and support farmers through expert advisory services provided by trained agri-preneurs.

S49. Ans.(c)
Sol. Shikhar Dhawan holds the record for the **fastest Test century on debut**, achieving this milestone in just 85 balls.

- **Career Highlights**:
  - Dhawan's international career lasted over 12 years, with appearances in 34 Tests, 167 ODIs, and 68 T20Is, scoring a total of 10,867 runs.
  - Known for his ODI performances, he was the highest run-scorer in the 2013 Champions Trophy, contributing significantly to India's title win.
- **Debut Matches**: He made his ODI debut in 2010 against Australia and his memorable Test debut in March 2013, where he achieved the fastest Test century by a debutant.

S50. Ans.(b)
Sol. In May 2024, **India and Nigeria** agreed to expedite the Local Currency Settlement System Agreement to facilitate trade in their respective domestic currencies.
Details-

- **Purpose**: The agreement enables trade transactions and settlement of capital and current account transactions using local currencies.
- **Additional Discussions**: Both countries also explored cooperation in the United Payments Interface (UPI) system at the Joint Trade Committee (JTC) meeting held in Abuja, Nigeria.

S51. Ans.(c)
Sol. Statement (I) is true, as the passage mentions that nuclear power has prevented over 60 gigatonnes of CO2 emissions.
Statement (II) is incorrect since the passage does not cite safety as the primary reason for the decline of nuclear power; rather, it points to a lack of new investments.
Statement (III) is true as the passage notes that the costs of transitioning to a fully sustainable energy system will likely increase without nuclear power.

S52. Ans.(b)
Sol. The passage emphasizes that nuclear power provides a reliable source of low-carbon energy and that its decline would hinder efforts to reduce CO2 emissions, making it harder to meet global climate targets.
Here are the relevant quotes from the passage that support the solution:

1. *"The decline of nuclear power could have serious implications for both electricity security and the cost of energy. Projections suggest that nuclear power in advanced economies could drop by as much as two-thirds by 2040 if no significant actions are taken. This would hinder efforts to reduce global CO2 emissions, as outlined in the Paris Agreement..."*
2. *"Without it, the costs of transitioning to a fully sustainable energy system will likely increase, and progress in reducing emissions could slow significantly."*

These lines highlight the concern about increased CO2 emissions and the risk to climate goals due to the decline in nuclear power.
While (a) mentions energy security, the main concern highlighted in the passage is the potential for increased CO2 emissions and the subsequent impact on climate goals.
(c) is incorrect because the passage acknowledges that nuclear power is part of the low-carbon energy mix but not the only source.
(d) is not directly supported by the passage, as the focus is on declining investments, not maintenance costs.
(e) is incorrect because the passage suggests that investing in advanced nuclear technologies is part of the solution, not a current issue.

S53. Ans.(c)
Sol. The passage suggests that nuclear power should complement renewable sources like solar and wind, not be deprioritized in favor of them. It highlights the importance of nuclear power in achieving low-carbon energy goals.
Here are the relevant quotes from the passage that support the solution:
1. *"To address these concerns, the report suggests several key government actions. These include supporting the safe operation of existing nuclear plants, encouraging the construction of new nuclear facilities, and investing in advanced nuclear technologies."*
2. *"By taking these steps, countries can ensure that nuclear power remains a vital part of the global low-carbon energy mix."*

These lines emphasize the actions recommended by the report, such as supporting existing plants, building new facilities, and investing in advanced technologies. There is no suggestion of prioritizing renewable energy over nuclear power.
(a), (b), (d), and (e) are all actions suggested by the report to ensure nuclear power remains a part of the global low-carbon energy mix.

S54. Ans.(c)
Sol. The passage mentions that without nuclear power, achieving emission reduction goals would be more difficult and would necessitate greater investments in renewables and energy efficiency.
Here are the relevant quotes from the passage that support the solution:
1. *"Achieving these reductions without nuclear power would require massive investments in renewables and energy efficiency, further complicating an already challenging transition to a low-carbon economy."*
2. *"Without it, the costs of transitioning to a fully sustainable energy system will likely increase, and progress in reducing emissions could slow significantly."*

These lines show that without nuclear power, greater investments in renewable energy and energy efficiency would be required to meet climate goals.
(a) is incorrect because the passage suggests that nuclear power complements solar and wind, rather than being fully replaced by them.
(b) is incorrect because the passage emphasizes the need for continued investment, not the abandonment of renewable technologies.
(d) is incorrect because while emissions might increase, alternatives such as renewable energy still exist, though they would require more investment.
(e) is incorrect because the passage states that the Paris Agreement's goals would be harder, not easier, to meet without nuclear power.

S55. Ans.(e)
Sol. The phrase clearly indicates the need for rapid, not slow, emission cuts. Option (e) is the incorrect interpretation, as it contradicts the urgency suggested by the passage. (a), (b), (c), and (d) are all correct interpretations of the phrase. The passage highlights the urgent need for significant reductions in CO2 emissions to meet international climate goals. It also implies that nuclear power plays an important role in achieving these rapid reductions.
(e) is the incorrect interpretation because the phrase "which calls for rapid cuts in emissions" emphasizes the need for quick, decisive actions, not slow progress. The passage stresses the urgency of the transition to low-carbon energy to meet climate goals.
Let's analyze each option in detail:
- **(a) The Sustainable Development Scenario demands immediate and significant reductions in CO2 emissions.**
  - This is a correct interpretation. The passage mentions the Sustainable Development Scenario as a model that requires *"rapid cuts in emissions."* This clearly indicates the need for immediate and large reductions in CO2 emissions.
- **(b) Meeting the goals of the Paris Agreement requires accelerated efforts in cutting CO2 emissions.**
  - This is also a correct interpretation. The passage connects the rapid cuts in emissions directly to the goals of the Paris Agreement, implying that to meet these goals, faster efforts are necessary.

- **(c) The scenario emphasizes swift actions for CO2 reduction to achieve climate goals.**
  - This is another correct interpretation. The phrase *"calls for rapid cuts in emissions"* explicitly points to the need for swift actions to meet climate goals.
- **(d) The passage implies that nuclear power helps meet the rapid emission reduction requirements.**
  - This is a correct interpretation. The passage suggests that nuclear power is a crucial component in achieving the rapid reduction in CO2 emissions, as it complements other low-carbon sources like renewables.
- **(e) The phrase indicates that slow progress in emission reductions is acceptable.**
  - This is the **incorrect** interpretation. The phrase explicitly states the need for *"rapid"* cuts in emissions, which contradicts the idea that slow progress would be acceptable. The entire passage emphasizes the urgency of reducing emissions, making this option wrong.

S56. Ans.(d)
Sol. The passage highlights the serious consequences of declining nuclear power, including threats to electricity security and increased costs, as nuclear energy plays a critical role in providing reliable, low-carbon energy.
Analysis:
(a) is incorrect because the passage does not mention a growing dependence on nuclear energy. In fact, it highlights the decline in investments in nuclear power and the closure of existing plants, which is reducing the role of nuclear power in the energy mix, not increasing it.
(b) is incorrect because the passage explicitly states that the decline in nuclear power poses a threat to electricity security, not an improvement. Nuclear power provides a consistent and reliable low-carbon energy source, and its decline could destabilize energy supplies.
(c) is incorrect because the passage suggests that energy costs will rise as a result of the decline in nuclear power. Nuclear power helps maintain cost stability in energy supplies, and its reduction would lead to higher costs, especially as investments in alternative sources like renewables increase.
(d) is the **correct** answer because the passage directly states that the decline of nuclear power has serious implications for electricity security and the cost of energy. Without nuclear power, which provides a stable and low-carbon energy source, electricity security is compromised, and the transition to alternative sources like renewables would become more expensive.
Supporting quote: *"The decline of nuclear power could have serious implications for both electricity security and the cost of energy."*
(e) is incorrect because while the passage suggests that there would be a need for increased investments in renewable energy to replace nuclear power, it does not state that advanced economies would revert to using more fossil fuels. The focus is on the need for low-carbon alternatives, not a return to carbon-intensive sources.

S57. Ans.(a)
Sol. The correct sequence is **FDCBAE.**
Rearranged sentence: "Adopting sustainable practices across industries, including renewable energy usage, waste reduction, and responsible resource management, is essential for mitigating the adverse effects of climate change and preserving biodiversity for future generations."
Explanation:
- The sentence starts with **(F)**, as it introduces the main subject: "Adopting sustainable practices across industries."
- **(D)** follows next, expanding on the practices, "including renewable energy usage, waste reduction."
- **(C)** logically adds "and responsible resource management," continuing the list of sustainable practices.
- **(B)** comes next, explaining why these practices are important: "is essential for mitigating the adverse effects."
- **(A)** adds further detail about what these effects are: "of climate change and preserving."
- **(E)** completes the sentence by providing the purpose: "biodiversity for future generations."

This arrangement ensures both grammatical correctness and contextual clarity.

S58. Ans.(c)
Sol. The correct sequence is CFABDE.
Rearranged sentence: "Effective leadership within organizations is not only about making strategic decisions but also about fostering a culture of trust, encouraging open communication, and empowering team members to take ownership of their roles, ultimately driving collective success."

Explanation:
- The sentence starts with **(C)** to introduce the subject: "Effective leadership within organizations is."
- **(F)** follows with "not only about making strategic decisions," setting up the contrast structure ("not only... but also").
- **(A)** continues the contrast, "but also about fostering a culture of trust."
- **(B)** adds further detail, "encouraging open communication, and."
- **(D)** logically follows, expanding on leadership responsibilities: "empowering team members to take."
- **(E)** completes the sentence with the goal of leadership: "ownership of their roles, ultimately driving collective success."

S59. Ans.(d)
Sol. The correct sequence is ACFDBE.
The sentence should logically begin with (A), as it introduces the subject of the sentence: artificial intelligence.
(C) follows naturally, expanding on what artificial intelligence can do (revolutionize industries) while introducing the ethical concerns.
(F) fits next, as it begins to list those ethical concerns, leading directly into (D), which provides specific examples of those concerns: job displacement, bias, and data security.
(B) then explains the necessity of regulation, and finally, (E) concludes by mentioning the need for responsible technological development.
Correct sentence:
"Artificial intelligence has the potential to revolutionize industries, but its ethical implications, including concerns over job displacement, bias, and data security, necessitate careful regulation and responsible technological development."

S60. Ans.(a)
Sol. The correct sequence is DFCAEB.
(D) introduces the context of urbanization reshaping the global landscape, which sets the stage for the rest of the sentence.
(F) naturally follows, as it continues the thought, mentioning the challenges cities face as a result of this reshaping.
(C) specifies the types of challenges, including housing shortages and pollution, adding concrete examples.
(A) then elaborates further, mentioning infrastructure strain and the need for a response.
(E) provides the response (innovative planning), and **(B)** concludes the sentence with the ultimate goal of creating livable environments for future generations.
Correct sentence:
"As urbanization continues to reshape the global landscape, cities face growing challenges such as housing shortages, pollution, and infrastructure strain, requiring innovative planning to ensure sustainable, livable environments for future populations."

S61. Ans.(b)
Sol. The errors are in Parts A and B.
Part A:- Gerund vs. Infinitive Use:
- **Rule:** Gerunds (verb + -ing) can act as nouns, and using a gerund often provides better sentence flow, especially in this context.
- **Infinitive phrases** like "to understand" can act as subjects, but using **"understanding"** (a gerund) would fit better because it works as a noun and emphasizes the continuous nature of learning personal finance.
- **Correction:** Change **"to understand"** to **"understanding"** to make the subject smoother and more appropriate for the sentence.

Part B:- Subject-Verb Agreement:
- **Rule:** The verb must agree with the subject in number (singular/plural).
- **Subject in the original sentence:** "To understand personal finance" (an infinitive phrase) is singular.
- **Verb:** "Empower" is plural, which doesn't match the singular subject. This creates an error in subject-verb agreement.

- **Correction:** The verb should be **singular** to match the singular subject. So, "empower" should be changed to **"empowers."**

Corrected Sentence:
"Understanding personal finance, including budgeting and investing, empowers individuals to make informed decisions and achieve long-term financial security."

S62. Ans.(b)
Sol. Analysis:
Explanation of Errors:
1. **Part (A): Subject-Verb Inversion**
   - **Rule:** When using "not only... but also" at the beginning of a sentence, **subject-verb inversion** is required after "not only." This means the verb should come before the subject.
   - **Error:** "Not only the team achieved" should be **"Not only did the team achieve"** to correctly invert the subject and verb.
   - **Correction:** Change "the team achieved" to **"did the team achieve."**
2. **Part (B): Incorrect Tense Order**
   - **Rule:** When using past perfect tense, "had" should come before the subject when a negative or limiting adverb (like "never before") is used at the beginning of the sentence.
   - **Error:** "but never before they had encountered" is incorrect. It should be **"but never before had they encountered."**
   - **Correction:** Change "they had" to **"had they."**

Corrected Sentence:
"Not only did the team achieve remarkable success in the project, but never before had they encountered such challenges that tested their skills and determination to this extent."

S63. Ans.(a)
Sol. There are two grammatical errors in the sentence:
1. **Error in (A):**
2. "Rapidly growth" is incorrect. "Rapidly" is an adverb, but the correct word needed to modify "growth" (a noun) is an adjective. The correct form should be **"rapid growth."**

Rules:
Adjective vs. Adverb Usage:
- Adjectives are used to modify nouns, while adverbs modify verbs, adjectives, or other adverbs. In this case, "growth" (a noun) needs an adjective ("rapid"), not an adverb ("rapidly").

3. **Error in (B):**
4. "Have led" is incorrect because "the growth in urban populations" is a singular subject, which requires a singular verb. The correct verb should be **"has led."**

Rules:
Subject-Verb Agreement:
- When the subject is singular, the verb must also be singular. In this case, "the growth" is singular, so the correct verb form is **"has"** (not "have").

Thus, the errors in **(A)** and **(B)** need to be corrected, making **(a) A-B** the right choice.

S64. Ans.(c)
Sol. There are two grammatical errors in the sentence:
1. **Error in (A):**
2. "If we would have known" is incorrect. In third conditional sentences (used to talk about unreal situations in the past), the correct form is **"If we had known."** "Would have" should not be used in the "if" clause.

Rules:
- **Third Conditional Sentences:**
  - In the "if" clause of a third conditional, we use "had" + past participle to express a past hypothetical situation. The correct form here is **"If we had known."**

3. **Error in (C):**
4. "We had prepared" is incorrect. After using the correct conditional form in the "if" clause, the second clause should follow with **"would have prepared"** to indicate the hypothetical result.

Rules:

- **Third Conditional Sentences:**
  - In the result clause of a third conditional, we use "would have" + past participle. The correct form should be **"we would have prepared."**

Corrected Sentence:
"If we had known about the new policy changes, we would have prepared more effectively for the upcoming challenges."

S65. Ans.(d)
Sol. There are two grammatical errors in the sentence:

1. **Error in (B):**
2. "The manager were aware" is incorrect. Since "the manager" is singular, the verb should be singular as well. The correct form should be **"the manager was aware."**

Rules:

- **Subject-Verb Agreement:**
  - When using "Neither...nor" in a sentence, the verb agrees with the subject closest to it. In this case, the closest subject is "the manager," which is singular, so the verb should be **"was."**

3. **Error in (D):**
4. "Cause the system to" is incorrect. The verb "cause" should be in the past tense to match the past narrative of the sentence. The correct form should be **"caused the system to."**

Rules:

- **Verb Tense Consistency:**
  - When describing a past event, all verbs in the sentence should be in the past tense. In this case, "cause" should be corrected to **"caused."**

Corrected Sentence:
"Neither the employees nor the manager was aware of the technical issue that caused the system to shut down unexpectedly."
Thus, the errors in **(B)** and **(D)** need to be corrected, making **(d) B-D** the right choice.

S66. Ans.(b)
Sol. There are two grammatical errors in the sentence:

1. **Error in (B):**
2. "Thousands of students applies" is incorrect. "Students" is plural, so the verb must agree in number. The correct form should be **"thousands of students apply."**

Rules:

- **Subject-Verb Agreement:**
  - A plural subject requires a plural verb. In this case, "thousands of students" is plural, so the verb should be **"apply,"** not "applies."

3. **Error in (C):**
4. "For admission to prestigious" is incorrect. The correct preposition when referring to being accepted or enrolled is **"admission into"** rather than "to."

Rules:

- **Correct Preposition Usage:**
  - "Admission into" is the correct phrase when talking about being accepted into a place or institution, rather than "admission to."

Corrected Sentence:
"Every year, thousands of students apply for admission into prestigious universities around the world, hoping to secure a place in top programs."
Thus, the errors are in **(B)** and **(C)**, making **(b) B-C** the right choice.

S67. Ans.(c)
Sol. There is one grammatical error in the sentence:
1. **Error in (A):**
2. "Each of the participants were asked" is incorrect. "Each" is a singular subject, even when followed by a plural noun ("participants"), and thus requires a singular verb. The correct form should be **"Each of the participants was asked."**

Rules:
- **Subject-Verb Agreement:**
  - When "each" is the subject, the verb should be singular. Therefore, the correct verb in this case is **"was,"** not "were."

Corrected Sentence:
"Each of the participants was asked to provide feedback on the event, including their suggestions for improvement and their overall satisfaction with the experience."
Thus, the error is in **(A)**, making **(c) A** the right choice.

S68. Ans.(d)
Sol. The passage highlights that perovskite solar cells are both "more affordable to produce" and "remarkably versatile," making them a faster route to solar energy adoption. Options (a) and (b) misinterpret specific details regarding efficiency and reliability. Option (c) confuses grid integration with panel technology, and (e) inaccurately attributes efficiency improvements to perovskite cells alone.

S69. Ans.(e)
Sol. All three assumptions—solar energy becoming a dominant energy source (I), reducing global reliance on fossil fuels (II), and contributing to meeting climate change goals (III)—are predicated on continued advancements in affordability, efficiency, and scalability of solar technology. If these advancements fail, each of these outcomes would likely be negatively impacted, thus weakening all the assumptions.

S70. Ans.(c)
Sol. The tone of the passage is **optimistic**. The author discusses several advancements in solar energy technology, such as improvements in efficiency, the rise of perovskite solar cells, and solutions to issues like intermittency and grid integration, all of which point toward a positive future for solar power. The passage emphasizes solar power's potential to play a major role in combating climate change and becoming a key energy source, indicating a hopeful outlook.

S71. Ans.(c)
Sol. The passage mentions that grid integration ensures solar energy can be "fed into national and regional grids," allowing for seamless distribution and scalability, meaning it can meet both individual and larger energy needs. While efficiency, reliability, and environmental impact are important, option (c) best captures the significance of grid integration.

S72. Ans.(e)
Sol. all three statements are incorrect, making the correct answer **(e)**.
Statement (I) is incorrect because the passage mentions that solar energy produces "no harmful emissions during electricity generation," but it does not claim zero emissions during **production and installation**.
Statement (II) is incorrect because the passage emphasizes the importance of both **grid integration** and **battery storage systems** in improving solar power reliability. Grid integration has not reduced the need for advancements in battery storage.
Statement (III) is incorrect because the passage does not suggest that **perovskite solar cells** have achieved higher efficiency than traditional photovoltaic panels. It highlights their affordability and versatility, but not higher efficiency.

S73. Ans.(c)
Sol. The passage states that tandem solar cells "are pushing efficiency above 25%, challenging old assumptions about solar's limitations," which implies that they help overcome the technical limitations previously associated with solar energy. The other options either misinterpret the context or introduce incorrect information.

S74. Ans.(d)
Sol. The best inference about John's work behavior is that **he is not dependable for urgent projects due to his tardiness and arrogance**.
Explanation:
- **(a)** is incorrect because the paragraph states that John struggles to meet deadlines, not that he meets them.
- **(b)** is incorrect because there is no mention in the paragraph that his arrogance is due to workload or criticism.
- **(c)** is incorrect because the paragraph does not suggest that John acknowledges his lack of skills or withdraws from any project.
- **(d)** is correct because the paragraph clearly mentions John's **tardiness** and **arrogance**, and how these behaviors disrupt the team, implying that he is not dependable, especially for urgent projects.
- **(e)** is incorrect because the paragraph states that John **dismisses** constructive feedback, not that he provides it.

S75. Ans.(b)
Sol. The paragraph explains that Lily spends long hours studying, often skipping social events and recreational activities, which shows her preference for studying over socializing.
(a) is incorrect because the paragraph does not state that Lily believes perfect grades are the key to friendships or social life.
(c) is incorrect because the paragraph does not mention her friends avoiding her, only that she chooses to stay home and study.
(d) is incorrect because Lily feels pressured and does not enjoy weekends with her friends.
(e) is incorrect because Lily does not balance her studies and social life; she prioritizes studying.
Thus, (b) is the correct answer: "Lily prefers studying over socializing, often choosing to stay home and review her notes while her friends go out."

S76. Ans.(b)
Sol. The passage mentions that mRNA vaccine technology is being researched for treating diseases like influenza, HIV, and certain cancers, supporting **(I)**. It also mentions that mRNA vaccines "provide a safer and faster way to develop vaccines," supporting **(II)**. **(III)** is not supported, as the passage does not claim that mRNA vaccines are more effective than all other vaccines. Therefore, **(b)** is correct.

S77. Ans.(d)
Sol. The passage explains that mRNA vaccines "instruct the body's cells to produce a protein that triggers an immune response," making **(d)** the correct statement. The other options either misrepresent or contradict information in the passage.

S78. Ans.(b)
Sol. The tone of the passage is **hopeful**. The author highlights the advancements in **personalized medicine**, **targeted therapies**, and **mRNA vaccines** as transformative developments that promise more effective and individualized treatments in the future. This positive and forward-looking perspective makes **(b)** the correct answer. The passage does not express doubt, concern, or pessimism, ruling out the other options.

S79. Ans.(b)
Sol. The passage mentions that the success of mRNA vaccines during the COVID-19 pandemic has spurred further research into using this technology for other diseases, such as influenza and HIV. This suggests that the platform's flexibility and speed make it an appealing area of study. The passage does not claim cost-effectiveness (**a**), permanent immunity (**d**), or the obsolescence of traditional vaccines (**c**), nor does it limit the technology to infectious diseases (**e**).

S80. Ans.(c)
Sol. The passage emphasizes how personalized medicine tailors treatments to individual genetic, environmental, and lifestyle factors. This implies that genetic research is critical for the success of personalized treatments. **(a)** introduces an economic factor not discussed in the passage, and **(d)** and **(e)** make absolute claims that are not supported by the text. **(b)** is incorrect, as personalized medicine reduces side effects, especially in targeted therapies.

S81. Ans.(b)
Sol.
- **(I)** is correct as the passage states that targeted therapies "block certain proteins that promote the growth of cancer cells without harming normal cells," thus reducing harmful side effects.
- **(II)** is also correct, as the passage explains that the success of mRNA vaccines during COVID-19 has spurred further research into using this technology for other diseases, including cancer.
- **(III)** is incorrect because personalized medicine also takes into account **environmental and lifestyle factors**, not just genetic ones.

Thus, the correct answer is **(b)**.

S82. Ans.(c)
Sol. The phrase *"shed light on"* is commonly used to mean clarifying or making something more understandable, which fits the context of explaining cognitive biases.
(a) emphasis – to give special importance to something
(b) proposed – suggested an idea or plan
(c) shed light – to make something clearer or easier to understand
(d) underscored – emphasized something
(e) No replacement required

S83. Ans.(d)
Sol. The word *equivalent* fits well in the sentence, referring to something of equal value, which is the intended meaning here.
(a) fabricated – made up, false
(b) economic – related to economics
(c) sustenance – means of sustaining life
(d) No replacement required
(e) commercial – related to business or commerce

S84. Ans.(b)
Sol. The word *scenarios* fits best because participants were asked to make decisions in imagined or hypothetical financial situations, making *scenarios* more appropriate than *backdrop*.
(a) No replacement required
(b) scenarios – imagined situations or sequences of events
(c) situation – set of circumstances
(d) predicament – a difficult or unpleasant situation
(e) context – the circumstances surrounding an event

S85. Ans.(d)
Sol. *Loss aversion* is a well-known psychological term, meaning people are more likely to avoid losses than to pursue gains, which fits the sentence's meaning.
(a) embrace – to accept or support something willingly
(b) No replacement required
(c) seizure – the act of taking something by force
(d) aversion – a strong dislike or disinclination
(e) espousal – the act of adopting or supporting a cause

S86. Ans.(e)
Sol. The framing effects altered participants' risk tolerance, meaning it changed or modified how they perceived risk, making altered the best choice.
(a) No replacement required
(b) process – a series of actions or steps
(c) coagulated – to thicken into a solid
(d) replaced – to take the place of something
(e) altered – changed or modified

S87. Ans.(b)
Sol. Behavioral economics is a well-established field that combines insights from psychology with economics to study how people actually behave in decision-making, making behavioral the correct choice.
(a) organizational – relating to the organization of something
(b) behavioral – relating to behavior, especially in terms of psychology
(c) No replacement required
(d) cohort – a group of people
(e) realistic – representing reality

S88. Ans.(d)
Sol. Solidarity (एकजुटता) means unity or agreement of feeling or action among individuals with a common interest. The sentence refers to workers collectively demanding better conditions, so "solidarity" fits.
- **Solitude** (अकेलापन): the state of being alone.
- **Apathy** (उदासीनता): lack of interest or concern.
- **Hostility** (शत्रुता): unfriendly or antagonistic behavior.
- **Detachment** (उदासीनता): emotional aloofness or neutrality.

S89. Ans.(b)
Sol. Muse (प्रेरणा का स्रोत) refers to a source of inspiration, especially for an artist. The sentence speaks about finding inspiration, so "muse" is the correct choice.
- **Routine** (नियमित दिनचर्या): a regular sequence of actions.
- **Monotony** (एकरसता): lack of variety and interest.
- **Impulse** (आवेग): a sudden strong desire to act.
- **Hesitation** (हिचकिचाहट): the act of pausing before taking action.

S90. Ans.(d)
Sol. After swapping **(ii) carry on** with **(iii) go over**, the paragraph reads:
"As the project deadline approached, the team needed to **pull together** their resources to ensure success. They began to **go over** the final details, making sure nothing was overlooked. Everyone felt the pressure, but they were determined to **carry on** despite the challenges. By the end of the day, they managed to **wrap up** their tasks, feeling accomplished and ready for the presentation."
Explanation of the Changes
- **Original Placement:**
  - "carry on" was used where the action required was to review the details, which is better expressed with "go over."
- **New Placement:**
  - By replacing "carry on" with "go over," the paragraph now accurately reflects that the team was reviewing the final details.
  - "carry on" remains to express the determination of the team to continue despite pressures.

Phrasal Verbs and Their Meanings

1. **Pull together**
   - **Meaning:** To gather or organize resources or people in a coordinated manner.
   - **Usage in the paragraph:** Correctly used to indicate that the team needed to combine their resources for success.
2. **Carry on**
   - **Meaning:** To continue doing something or to persist in an activity.
   - **Usage in the paragraph:** Incorrectly used in place of "go over." It should have been swapped with "go over."
3. **Go over**
   - **Meaning:** To review or examine something carefully.
   - **Usage in the paragraph:** Initially misplaced, it should replace "carry on" to correctly convey that the team was reviewing the final details.
4. **Wrap up**
   - **Meaning:** To complete or finalize something.
   - **Usage in the paragraph:** Correctly used to indicate that the team finished their tasks.

S91. Ans.(d)

Sol. Final arrangement:

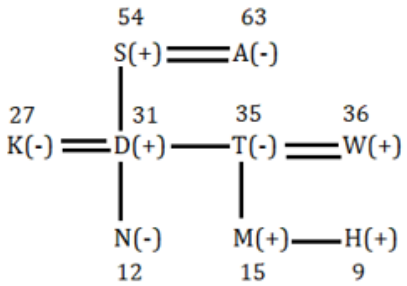

27 + 31 + 35 + 36 = 129 years

S92. Ans.(e)

Sol. Final arrangement:

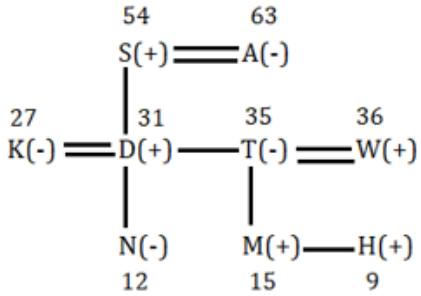

All I, II and III are correct

S93. Ans.(a)

Sol. Final arrangement:

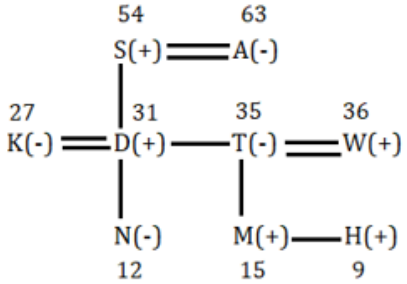

Except S's son, age of rest persons is a multiple of 9 or non-prime number.

S94. Ans.(c)
Sol. Final arrangement:

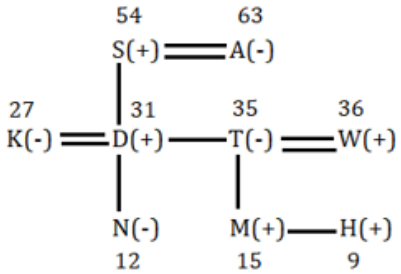

W's brother-in-law

S95. Ans.(b)
Sol. Final arrangement:

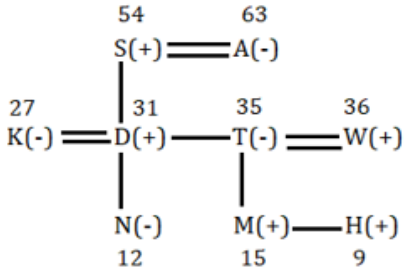

Father

S96. Ans.(c)
Sol. Final Arrangement:

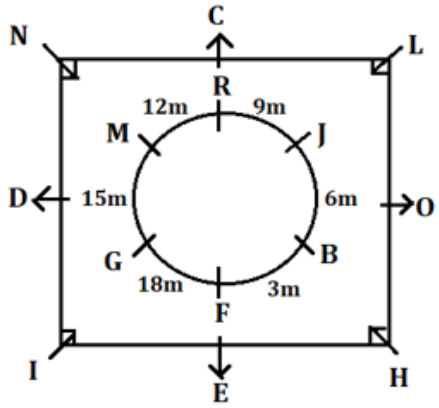

S97. Ans.(b)
Sol. Final Arrangement:

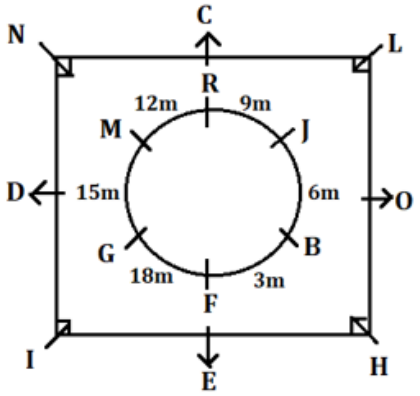

S98. Ans.(e)
Sol. Final Arrangement:

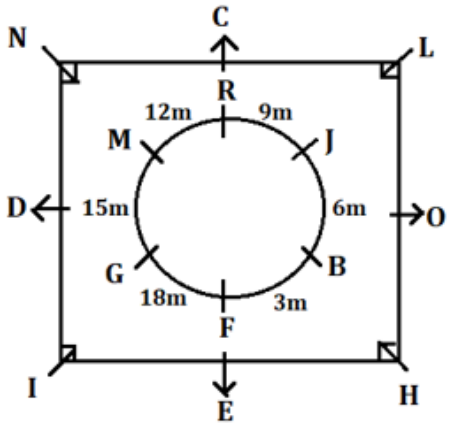

S99. Ans.(a)
Sol. Final Arrangement:

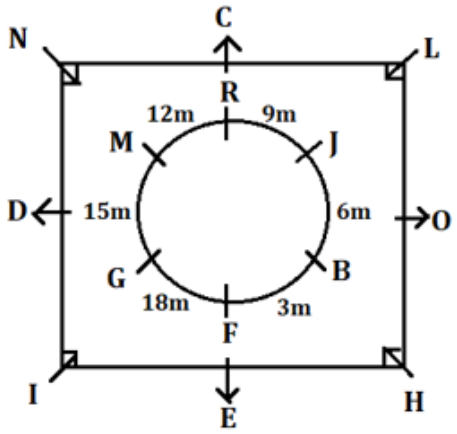

Except B, all the other persons sit on the outer table.

S100. Ans.(c)
Sol. Final Arrangement:

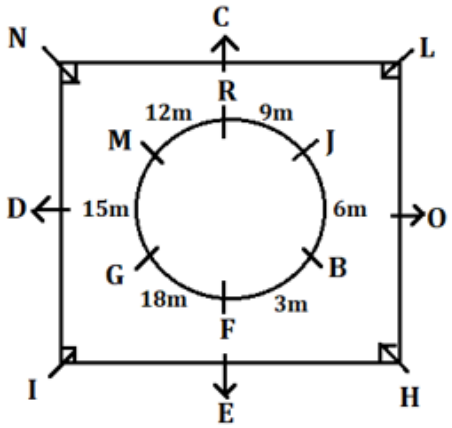

S101. Ans.(b)

S102. Ans.(a)

S103. Ans.(e)

S104. Ans.(c)

S105. Ans.(b)

S106. Ans.(b)
Sol. From Statement II:

Boxes
D
B
E
A
C

Box E is placed at third position.

S107. Ans.(d)

S108. Ans.(e)
Sol.

Words	Codes
Classes	Mj
tomorrow/cancelled	uj/km
Scheduled	Pr
Are	Ml
Regular	Kl
Important	Mo
exercise/is	hg/qw
Meetings	Jk

S109. Ans.(a)
Sol.

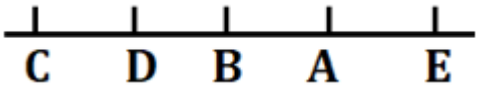

E sits fourth to the right of C.

S110. Ans.(a)
Sol. Assumption (a) is in line with the statement because the statement mentions that city governments are implementing policies to combat rising air pollution levels by encouraging the use of electric vehicles (EVs). This implies that the shift to EVs is driven by their potential to reduce pollution and emissions, which is based on the belief that EVs produce fewer harmful environmental effects compared to conventional fuel-powered vehicles.

S111. Ans.(d)
Sol. Both II and III are directly related to the statement.

S112. Ans.(d)
Sol. Final Arrangement:

Designations	Persons	Sports
CEO	D	Hockey
VP	F	Badminton
SM	B	Basketball
Manager	A	Chess
AM	E	Tennis
JO	G	Volleyball
Clerk	C	Football
Trainee	H	Cricket

Five, Basketball

S113. Ans.(c)
Sol. Final Arrangement:

Designations	Persons	Sports
CEO	D	Hockey
VP	F	Badminton
SM	B	Basketball
Manager	A	Chess
AM	E	Tennis
JO	G	Volleyball
Clerk	C	Football
Trainee	H	Cricket

C - Clerk

S114. Ans.(c)
Sol. Final Arrangement:

Designations	Persons	Sports
CEO	D	Hockey
VP	F	Badminton
SM	B	Basketball
Manager	A	Chess
AM	E	Tennis
JO	G	Volleyball
Clerk	C	Football
Trainee	H	Cricket

The person designated as Manager plays Chess.

S115. Ans.(b)
Sol. Final Arrangement:

Designations	Persons	Sports
CEO	D	Hockey
VP	F	Badminton
SM	B	Basketball
Manager	A	Chess
AM	E	Tennis
JO	G	Volleyball
Clerk	C	Football
Trainee	H	Cricket

Junior Officer

S116. Ans.(e)
Sol. Final Arrangement:

Designations	Persons	Sports
CEO	D	Hockey
VP	F	Badminton
SM	B	Basketball
Manager	A	Chess
AM	E	Tennis
JO	G	Volleyball
Clerk	C	Football
Trainee	H	Cricket

As many persons designated between E and H.

S117. Ans.(c)
Sol.

Boxes
Q
R
S
U
T
V
P

S118. Ans.(b)
Sol. LONGITUDE = MNMHJSTEF
TS**N**MMJ**H**FE = 22.

S119. Ans.(c)
Sol. Both II and III align with the statement as they tackle labor shortages using immersive technologies. Implementing these environments quickly upskills workers, while partnering with tech providers ensures industries adopt the necessary tools, directly addressing the skills gap mentioned.

S120. Ans.(c)
Sol. Statement I directly supports the development of 6G and its related technologies like RIS.

S121. Ans.(a)
Sol. Options (a) supports the growth of clean energy solutions like hydrogen fuel cells as a climate change measure.

S122. Ans.(b)
Sol. Logic here is:
Number: The lowest odd number is picked first and the digits of that number is reversed and placed in extreme left end then then smallest even number is picked in the next step and the digits of that number is reversed and placed in extreme left end.
Words: The word in which first letter from the left end has the highest place value is picked and reversed and then placed in extreme right end.
Input: 45 courage 86 understand 31 venture 32 meticulous 42 explore
Step I: 13 45 courage 86 understand 32 meticulous 42 explore erutnev
Step II: 23 13 45 courage 86 meticulous 42 explore erutnev dnatsrednu
Step III: 54 23 13 courage 86 42 explore erutnev dnatsrednu suolucitem
Step IV: 24 54 23 13 courage 86 erutnev dnatsrednu suolucitem erolpxe
Step V: 68 24 54 23 13 erutnev dnatsrednu suolucitem erolpxe egaruoc

S123. Ans.(b)
Sol. Logic here is:
Number: The lowest odd number is picked first and the digits of that number is reversed and placed in extreme left end then then smallest even number is picked in the next step and the digits of that number is reversed and placed in extreme left end.
Words: The word in which first letter from the left end has the highest place value is picked and reversed and then placed in extreme right end.
Input: 45 courage 86 understand 31 venture 32 meticulous 42 explore
Step I: 13 45 courage 86 understand 32 meticulous 42 explore erutnev
Step II: 23 13 45 courage 86 meticulous 42 explore erutnev dnatsrednu
Step III: 54 23 13 courage 86 42 explore erutnev dnatsrednu suolucitem
Step IV: 24 54 23 13 courage 86 erutnev dnatsrednu suolucitem erolpxe
Step V: 68 24 54 23 13 erutnev dnatsrednu suolucitem erolpxe egaruoc

S124. Ans.(d)
Sol. Logic here is:
Number: The lowest odd number is picked first and the digits of that number is reversed and placed in extreme left end then then smallest even number is picked in the next step and the digits of that number is reversed and placed in extreme left end.
Words: The word in which first letter from the left end has the highest place value is picked and reversed and then placed in extreme right end.
Input: 45 courage 86 understand 31 venture 32 meticulous 42 explore
Step I: 13 45 courage 86 understand 32 meticulous 42 explore erutnev
Step II: 23 13 45 courage 86 meticulous 42 explore erutnev dnatsrednu
Step III: 54 23 13 courage 86 42 explore erutnev dnatsrednu suolucitem
Step IV: 24 54 23 13 courage 86 erutnev dnatsrednu suolucitem erolpxe
Step V: 68 24 54 23 13 erutnev dnatsrednu suolucitem erolpxe egaruoc

S125. Ans.(e)
Sol. Logic here is:
Number: The lowest odd number is picked first and the digits of that number is reversed and placed in extreme left end then then smallest even number is picked in the next step and the digits of that number is reversed and placed in extreme left end.
Words: The word in which first letter from the left end has the highest place value is picked and reversed and then placed in extreme right end.
Input: 45 courage 86 understand 31 venture 32 meticulous 42 explore
Step I: 13 45 courage 86 understand 32 meticulous 42 explore erutnev
Step II: 23 13 45 courage 86 meticulous 42 explore erutnev dnatsrednu
Step III: 54 23 13 courage 86 42 explore erutnev dnatsrednu suolucitem
Step IV: 24 54 23 13 courage 86 erutnev dnatsrednu suolucitem erolpxe
Step V: 68 24 54 23 13 erutnev dnatsrednu suolucitem erolpxe egaruoc

S126. Ans.(e)
Sol. Logic here is:
Number: The lowest odd number is picked first and the digits of that number is reversed and placed in extreme left end then then smallest even number is picked in the next step and the digits of that number is reversed and placed in extreme left end.
Words: The word in which first letter from the left end has the highest place value is picked and reversed and then placed in extreme right end.
Input: 45 courage 86 understand 31 venture 32 meticulous 42 explore

Step I: 13 45 courage 86 understand 32 meticulous 42 explore erutnev
Step II: 23 13 45 courage 86 meticulous 42 explore erutnev dnatsrednu
Step III: 54 23 13 courage 86 42 explore erutnev dnatsrednu suolucitem
Step IV: 24 54 23 13 courage 86 erutnev dnatsrednu suolucitem erolpxe
Step V: 68 24 54 23 13 erutnev dnatsrednu suolucitem erolpxe egaruoc

S127. Ans.(c)
Sol.

Days	Persons
Monday	P
Tuesday	O
Wednesday	S
Thursday	N
Friday	R
Saturday	M
Sunday	Q

S128. Ans.(d)
Sol.

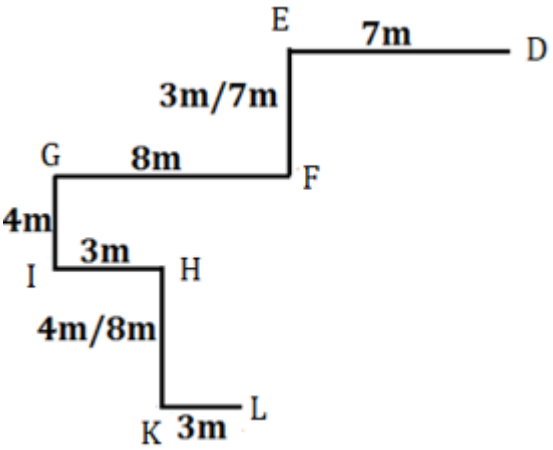

S129. Ans.(e)
Sol.

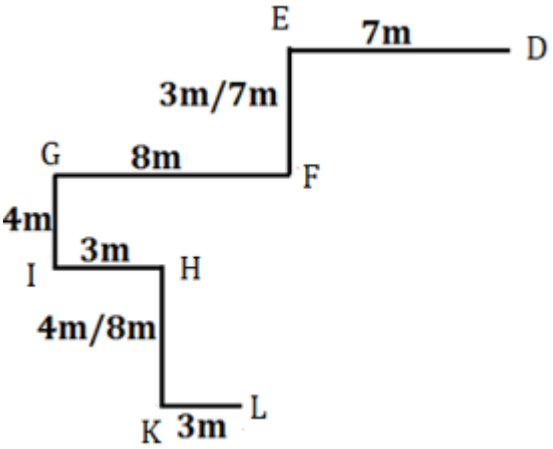

S130. Ans.(c)
Sol.

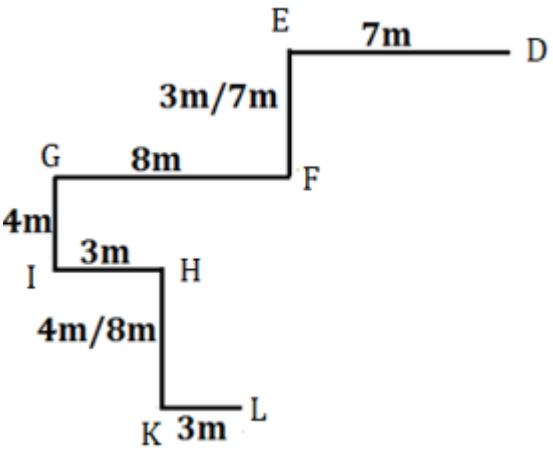

S131. Ans.(b)
Sol. Argument II is strong because it directly highlights the practical benefits and impact on user experience.

S132. Ans.(e)
Sol. Option (e) is correct because stricter government regulations encourage companies to develop eco-friendly alternatives. Biodegradable electronics help companies comply with these rules, reducing environmental impact and aligning with sustainable practices.

S133. Ans.(e)

S134. Ans.(b)
Sol.
Series 1: 1 & I @ 4 % D 9 ~ G 2 # K * 5 T $ 7 Q 3 P 6 J H 8 M S ^
Step I: 1 & K @ 4 % D 9 ~ G 2 # M * 5 V $ 7 Q 3 P 6 J H 8 M U ^
Step II: 1 & K @ 4 % D 9 ~ G 2 # M * 5 V $ 7 Q C P F J H H M U ^
Step III: 1 & K @ 4 % W 9 ~ T 2 # M * 5 V $ 7 Q C P F J H H M U ^
Series 2: % T 5 K 7 B # 9 F Ψ G 3 P ! L 1 H * Q 8 S 4 V ^ R & J 6
Step I: % T 5 K 7 D # 9 H Ψ G 3 R ! L 1 J * Q 8 S 4 X ^ T & J 6
Step II: % T E K G D # 9 H Ψ G C R ! L A J * Q H S D X ^ T & J 6
Step III: % T E K G D # 9 H Ψ G C R ! L A J * Q H S D X ^ T & Q 6
Series 3: 7 F O # Q 9 B 3 L @ R 1 K $ A 8 Y Ψ H 4 G M @ N 2 % S
Step I: 7 F Q # Q 9 B 3 N @ R 1 M $ A 8 Y Ψ H 4 G O @ N 2 % S
Step II: 7 F Q # Q I B C N @ R A M $ A H Y Ψ H D G O @ N 2 % S
Step III: 7 F Q # Q I B C N @ R A M $ A H Y Ψ H D G O @ M 2 % S

S135. Ans.(c)
Sol.
Series 1: 1 & I @ 4 % D 9 ~ G 2 # K * 5 T $ 7 Q 3 P 6 J H 8 M S ^
Step I: 1 & K @ 4 % D 9 ~ G 2 # M * 5 V $ 7 Q 3 P 6 J H 8 M U ^
Step II: 1 & K @ 4 % D 9 ~ G 2 # M * 5 V $ 7 Q C P F J H H M U ^
Step III: 1 & K @ 4 % W 9 ~ T 2 # M * 5 V $ 7 Q C P F J H H M U ^
Series 2: % T 5 K 7 B # 9 F Ψ G 3 P ! L 1 H * Q 8 S 4 V ^ R & J 6
Step I: % T 5 K 7 D # 9 H Ψ G 3 R ! L 1 J * Q 8 S 4 X ^ T & J 6

Step II: % T E K G D # 9 H Ψ G C R ! L A J * Q H S D X ^ T & J 6
Step III: % T E K G D # 9 H Ψ G C R ! L A J * Q H S D X ^ T & Q 6
Series 3: 7 F O # Q 9 B 3 L @ R 1 K $ A 8 Y Ψ H 4 G M @ N 2 % S
Step I: 7 F Q # Q 9 B 3 N @ R 1 M $ A 8 Y Ψ H 4 G O @ N 2 % S
Step II: 7 F Q # Q I B C N @ R A M $ A H Y Ψ H D G O @ N 2 % S
Step III: 7 F Q # Q I B C N @ R A M $ A H Y Ψ H D G O @ M 2 % S

S136. Ans.(b)
Sol.
Series 1: 1 & I @ 4 % D 9 ~ G 2 # K * 5 T $ 7 Q 3 P 6 J H 8 M S ^
Step I: 1 & K @ 4 % D 9 ~ G 2 # M * 5 V $ 7 Q 3 P 6 J H 8 M U ^
Step II: 1 & K @ 4 % D 9 ~ G 2 # M * 5 V $ 7 Q C P F J H H M U ^
Step III: 1 & K @ 4 % W 9 ~ T 2 # M * 5 V $ 7 Q C P F J H H M U ^
Series 2: % T 5 K 7 B # 9 F Ψ G 3 P ! L 1 H * Q 8 S 4 V ^ R & J 6
Step I: % T 5 K 7 D # 9 H Ψ G 3 R ! L 1 J * Q 8 S 4 X ^ T & J 6
Step II: % T E K G D # 9 H Ψ G C R ! L A J * Q H S D X ^ T & J 6
Step III: % T E K G D # 9 H Ψ G C R ! L A J * Q H S D X ^ T & Q 6
Series 3: 7 F O # Q 9 B 3 L @ R 1 K $ A 8 Y Ψ H 4 G M @ N 2 % S
Step I: 7 F Q # Q 9 B 3 N @ R 1 M $ A 8 Y Ψ H 4 G O @ N 2 % S
Step II: 7 F Q # Q I B C N @ R A M $ A H Y Ψ H D G O @ N 2 % S
Step III: 7 F Q # Q I B C N @ R A M $ A H Y Ψ H D G O @ M 2 % S

S137. Ans.(e)
Sol.
Series 1: 1 & I @ 4 % D 9 ~ G 2 # K * 5 T $ 7 Q 3 P 6 J H 8 M S ^
Step I: 1 & K @ 4 % D 9 ~ G 2 # M * 5 V $ 7 Q 3 P 6 J H 8 M U ^
Step II: 1 & K @ 4 % D 9 ~ G 2 # M * 5 V $ 7 Q C P F J H H M U ^
Step III: 1 & K @ 4 % W 9 ~ T 2 # M * 5 V $ 7 Q C P F J H H M U ^
Series 2: % T 5 K 7 B # 9 F Ψ G 3 P ! L 1 H * Q 8 S 4 V ^ R & J 6
Step I: % T 5 K 7 D # 9 H Ψ G 3 R ! L 1 J * Q 8 S 4 X ^ T & J 6
Step II: % T E K G D # 9 H Ψ G C R ! L A J * Q H S D X ^ T & J 6
Step III: % T E K G D # 9 H Ψ G C R ! L A J * Q H S D X ^ T & Q 6
Series 3: 7 F O # Q 9 B 3 L @ R 1 K $ A 8 Y Ψ H 4 G M @ N 2 % S
Step I: 7 F Q # Q 9 B 3 N @ R 1 M $ A 8 Y Ψ H 4 G O @ N 2 % S
Step II: 7 F Q # Q I B C N @ R A M $ A H Y Ψ H D G O @ N 2 % S
Step III: 7 F Q # Q I B C N @ R A M $ A H Y Ψ H D G O @ M 2 % S

S138. Ans.(c)
Sol. BIODEGRADABLE – FJPHFKVBHBFPF – JKV – 10*11*22 - 2420

S139. Ans.(b)
Sol. The statement implies that flexible work hours are expected to boost productivity, which aligns with Assumption 1—that flexible hours can help employees achieve better work-life balance, potentially increasing their productivity. This is a reasonable expectation based on the company's goal of enhancing productivity.

S140. Ans.(d)
Sol. Assumption III aligns with the statement because the financial institution's plan to invest in cybersecurity implies it sees strong security as necessary to protect customer data effectively. This reinforces the assumption that advanced cybersecurity is essential for safeguarding sensitive information.

S141. Ans.(b)
Sol.
For company A
Total toys manufactured = 40
Total toys unsold = $30 \times \frac{40}{100} = 12$
Total toys sold = 40-12 = 28
Metallic toys sold = $\frac{28+2}{2} = 15$
Plastic toys sold = 28 – 15 = 13
Similarly,

Companies	Total toys manufactured	Total toys unsold	Total toys sold	Metallic toys sold	Plastic toys sold
A	40	12	28	15	13
B	33	9	24	18	6
C	25	6	19	11	8
D	38	3	35	20	15

Total number of metallic toys sold by A and C = 15 + 11 = 26
Total number of unsold toys by B and D = 9 + 3 = 12
Required difference = 26 – 12 = 14

S142. Ans.(e)
Sol.
For company A
Total toys manufactured = 40
Total toys unsold = $30 \times \frac{40}{100} = 12$
Total toys sold = 40-12 = 28
Metallic toys sold = $\frac{28+2}{2} = 15$
Plastic toys sold = 28 – 15 = 13
Similarly,

Companies	Total toys manufactured	Total toys unsold	Total toys sold	Metallic toys sold	Plastic toys sold
A	40	12	28	15	13
B	33	9	24	18	6
C	25	6	19	11	8
D	38	3	35	20	15

Total number of toys manufactured by E = $\frac{140}{100} \times 25 = 35$
Total toys sold by E = $\frac{(19+35)}{2} = 27$
Total toys unsold by E = 35 – 27 = 8
Required percentage = $\frac{8-8}{8} \times 100 = 0\%$

S143. Ans.(a)
Sol.
For company A
Total toys manufactured = 40
Total toys unsold = $30 \times \frac{40}{100} = 12$
Total toys sold = 40-12 = 28
Metallic toys sold = $\frac{28+2}{2} = 15$
Plastic toys sold = 28 – 15 = 13
Similarly,

Companies	Total toys manufactured	Total toys unsold	Total toys sold	Metallic toys sold	Plastic toys sold
A	40	12	28	15	13
B	33	9	24	18	6
C	25	6	19	11	8
D	38	3	35	20	15

Total number of unsold metallic toys by D = $\frac{10}{100} \times 20 = 2$
Total number of unsold plastic toys by D = 3 – 2 = 1
Total plastic toys manufactured by D = 15 + 1 = 16
Required difference = 28 – 16 = 12

S144. Ans.(b)
Sol.
For company A
Total toys manufactured = 40
Total toys unsold = 30 × $\frac{40}{100} = 12$
Total toys sold = 40-12 = 28
Metallic toys sold = $\frac{28+2}{2} = 15$
Plastic toys sold = 28 – 15 = 13
Similarly,

Companies	Total toys manufactured	Total toys unsold	Total toys sold	Metallic toys sold	Plastic toys sold
A	40	12	28	15	13
B	33	9	24	18	6
C	25	6	19	11	8
D	38	3	35	20	15

Required ratio = (13+15) : (9+6)
= 28 : 15

S145. Ans.(c)
Sol.
For company A
Total toys manufactured = 40
Total toys unsold = 30 × $\frac{40}{100} = 12$
Total toys sold = 40-12 = 28
Metallic toys sold = $\frac{28+2}{2} = 15$
Plastic toys sold = 28 – 15 = 13
Similarly,

Companies	Total toys manufactured	Total toys unsold	Total toys sold	Metallic toys sold	Plastic toys sold
A	40	12	28	15	13
B	33	9	24	18	6
C	25	6	19	11	8
D	38	3	35	20	15

Average number of toys sold by C and the plastic toys sold by A = $\frac{19+13}{2} = 16$
Required percentage= $\frac{16}{20} \times 100 = 80\%$

S146. Ans.(c)
Sol. The pattern of the series:

X, 168, 1 72, 145, Y, Z

-1^3 $+2^2$ -3^3 $+4^2$ -5^3

X = 168+1 = 169
Y = 145 + 16 = 161
Z = 161-125 = 36
8th term of the series = 36 + 6^2 – 7^3
= 36 + 36 -343 = -271

S147. Ans.(d)
Sol. The pattern of the series:

X, 168, 1 72, 145, Y, Z

-1^3 $+2^2$ -3^3 $+4^2$ -5^3

X = 168+1 = 169
Y = 145 + 16 = 161
Z = 161-125 = 36
From (i) X is greater than Y (It is correct)
From (ii) Z is square of even number (It is correct)
From (iii) X is less than Z (It is incorrect)

S148. Ans.(c)
Sol. The pattern of the series:

X, 168, 1 72, 145, Y, Z

-1^3 $+2^2$ -3^3 $+4^2$ -5^3

X = 168+1 = 169
Y = 145 + 16 = 161
Z = 161-125 = 36
Required sum = 161 + 36 =197

S149. Ans.(e)
Sol.

Interest received from the first scheme = $\left(5000 \times t \times \frac{12}{100}\right) = Rs\ 600t$

Amount invested in second scheme = $600t \times 2 = 1200t$ Rs

ATQ,

$$6300 = 1200t + \left(1200t \times \frac{15}{100} \times 5\right)$$

$$6300 = 2100t$$

$$3 = t$$

S150. Ans.(e)
Sol.

Speed of the train A = $\frac{200}{8} = 25$ m/sec

Length of the train B = 150 + 200= 350 meters

ATQ,

Speed of train B = $\frac{350+150}{25} = 20$ m/sec

Required time = $\frac{350+200}{25+20} = \frac{110}{9}$ seconds

S151. Ans.(c)
Sol. In box A
Let number of pens be 4a
And number of sharpeners = 3a
Given, Total number of sharpeners and erasers = 10
So, number of erasers = 10 - 3a
Also given, Difference between the probability of picking a pen and the probability of picking an eraser = 2/9

$$\frac{4aC_1}{4aC_1+10}-\frac{10-3aC_1}{4aC_1+10}=\frac{2}{9}$$
$$\frac{4a}{4a+10}-\frac{10-3a}{4a+10}=\frac{2}{9}$$
$$\frac{4a-10+3a}{4a+10}=\frac{2}{9}$$
$$(7a-10)9=2(4a+10)$$
$$63a-90=8a+20$$
$$55a=110$$
$$a=2$$

Similarly,

Boxes	Pens	sharpeners	Erasers
A	8	6	4
B	6	8	3
C	9	6	7

Required ratio = (7+3) : 8
= 10 : 8 = 5:4

S152. Ans.(d)
Sol. In box A
Let number of pens be 4a
And number of sharpeners = 3a
Given, Total number of sharpeners and erasers = 10
So, number of erasers = 10 - 3a
Also given, Difference between the probability of picking a pen and the probability of picking an eraser = 2/9

$$\frac{4aC_1}{4aC_1+10}-\frac{10-3aC_1}{4aC_1+10}=\frac{2}{9}$$
$$\frac{4a}{4a+10}-\frac{10-3a}{4a+10}=\frac{2}{9}$$
$$\frac{4a-10+3a}{4a+10}=\frac{2}{9}$$
$$(7a-10)9=2(4a+10)$$
$$63a-90=8a+20$$
$$55a=110$$
$$a=2$$

Similarly,

Boxes	Pens	sharpeners	Erasers
A	8	6	4
B	6	8	3
C	9	6	7

P = 6/4 = 1.5
Q = 6/3 = 2
From I. P > Q (it is incorrect)
From II. 4P = 3Q (it is correct)
From III. Q : P = 4 : 3 (it is correct)

S153. Ans.(e)

Sol. In box A

Let number of pens be 4a

And number of sharpeners = 3a

Given, Total number of sharpeners and erasers = 10

So, number of erasers = 10 - 3a

Also given, Difference between the probability of picking a pen and the probability of picking an eraser = 2/9

$$\frac{4aC_1}{4aC_1+10}-\frac{10-3aC_1}{4aC_1+10}=\frac{2}{9}$$

$$\frac{4a}{4a+10}-\frac{10-3a}{4a+10}=\frac{2}{9}$$

$$\frac{4a-10+3a}{4a+10}=\frac{2}{9}$$

$$(7a-10)9=2(4a+10)$$

$$63a-90=8a+20$$

$$55a=110$$

$$a=2$$

Similarly,

Boxes	Pens	sharpeners	Erasers
A	8	6	4
B	6	8	3
C	9	6	7

Required sum = 6 + 8 + 6 = 20

S154. Ans.(c)

Sol. In box A

Let number of pens be 4a

And number of sharpeners = 3a

Given, Total number of sharpeners and erasers = 10

So, number of erasers = 10 - 3a

Also given, Difference between the probability of picking a pen and the probability of picking an eraser = 2/9

$$\frac{4aC_1}{4aC_1+10}-\frac{10-3aC_1}{4aC_1+10}=\frac{2}{9}$$

$$\frac{4a}{4a+10}-\frac{10-3a}{4a+10}=\frac{2}{9}$$

$$\frac{4a-10+3a}{4a+10}=\frac{2}{9}$$

$$(7a-10)9=2(4a+10)$$

$$63a-90=8a+20$$

$$55a=110$$

$$a=2$$

Similarly,

Boxes	Pens	sharpeners	Erasers
A	8	6	4
B	6	8	3
C	9	6	7

$$X=\frac{8+6+4}{3}=\frac{18}{3}=6$$

S155. Ans.(a)
Sol. The pattern of the series I:

8, 9, 17, 52, 25A+7, 1036, B

$\times 1+1$ $\times 2-1$ $\times 3+1$ $\times 4-1$ $\times 5+1$ $\times 6-1$

52×4-1=25A+7
200=25A
A=8
B = 1036×6-1=6215
From (i) B/113 + A > 67
6215/113 + 8 > 67
63 > 67
It is correct
From (ii) $\sqrt{B+26} = 79$
$\sqrt{6215+26} = 79$
79 = 79
It is correct
From (iii) A = 8
First term of the series I = 8
A is completely divisible by first term of the series I.
It is correct

S156. Ans.(e)
Sol. The pattern of the series I:

8, 9, 17, 52, 25A+7, 1036, B

$\times 1+1$ $\times 2-1$ $\times 3+1$ $\times 4-1$ $\times 5+1$ $\times 6-1$

52×4-1=25A+7
200=25A
A=8
B = 1036×6-1=6215
B = 6215

S157. Ans.(b)
Sol. The pattern of the series I:

8, 9, 17, 52, 25A+7, 1036, B

$\times 1+1$ $\times 2-1$ $\times 3+1$ $\times 4-1$ $\times 5+1$ $\times 6-1$

52×4-1=25A+7
200=25A
A=8
B = 1036×6-1=6215
A = 8+5 =13
13 = First term of the series II
The pattern of the series II:

13 14 27 82

$\times 1+1$ $\times 2-1$ $\times 3+1$

S158. Ans.(d)
Sol.
I. $5x^2 + 6x + 1 = 0$
$5x^2 + 5x + 1x + 1 = 0$
x = -1 , -1/5

II. $100y^2 + 25y + 1 = 0$
$100y^2 + 20y+5y + 1 = 0$
$y = -1/5, -1/20$
So, $x \le y$

S159. Ans.(c)
Sol.
I. $2x^2 - 17x + 21 = 0$
$2x^2 - 14x - 3x + 21 = 0$
$x = 7, 1.5$
II. $y^2 – 16y + 64 = 0$
$y^2 – 8y – 8y + 64 = 0$
$y = 8, 8$
So, $x < y$

S160. Ans.(e)
Sol.
I. $x^2 -3x + 2\frac{2}{9} = 0$
$9x^2 -27x + 20 = 0$
$9x^2 -15 -12x + 20 = 0$
$x = 5/3 , 4/3$
II. $y = \sqrt{\sqrt{\frac{2401}{625}}}$
$y = 7/5$
So, no relation can be established between x and y

S161. Ans.(c)
Sol.
I. $x^2 - 1\frac{3}{10}x + \frac{21}{50} = 0$
$50x^2 – 65x + 21 = 0$
$50x^2 – 35x -30x + 21 = 0$
$x = 3/5, 7/10$
II. $y^2 - 1\frac{4}{5}y + \frac{4}{5} = 0$
$5y^2 – 9y + 4 = 0$
$5y^2 – 5y - 4y + 4 = 0$
$y = 1, \frac{4}{5}$
So, $x < y$

S162. Ans.(a)
Sol.
I. $4x^2 – 81 = (8-5)x^2$
$x^2 = 81$
$x = 9, -9$
II. $y^2 + 11y + 14 + 9y = -86$
$y^2 + 20y + 100 = 0$
$y = -10, -10$
So, $x > y$

S163. Ans.(a)
Sol.
P can complete the whole work = $\frac{4}{50} \times 100 = 8$ days
Q can complete the whole work = 8+4 = 12 days
Total work (LCM of 8 & 12) = 24 units
The efficiency of P and Q is 3 & 2 units/day respectively
Let the efficiency of R be r unit/day
ATQ,
$(3 + r) \times 2 + 2 \times 3 = 24$
$(3 + r) \times 2 = 18$
$3 + r = 9$
$6 = r$
Required days $= \frac{24}{6} = 4$ days

S164. Ans.(c)
Sol. Let the marked price and selling price of the diamond be 6a and 5a respectively.
Let the cost price be b
ATQ,
$5a \times 2 - 2b = 4b$
$10a = 6b$
$\frac{a}{b} = \frac{6}{10} = \frac{3}{5} = \frac{3d}{5d}$
Required ratio = 6a : b
= 6(3d) : 5d
= 18 : 5

S165. Ans.(c)
Sol. Let the speed of the boat in still water and the speed of the current be 9a and 2a km/hr respectively

Given, $\frac{176}{8} = 9a + 2a$
$a = 2$
ATQ,
$\frac{D}{9a + 2a} - \frac{D - 116}{9a - 2a} = 4$
$\frac{D}{22} - \frac{D - 116}{14} = 4$
$\frac{7D - 11D + 1276}{154} = 4$
$4D = 660$
$D = 165$
Required time = $\frac{165-60}{14} = 7.5$ hours

S166. Ans.(e)
Sol. Let the amount received by P, Q, R, S and T be p, q, 5a, s and 3a respectively.
Given, p + q – r = 500…(i)
5a + s – 3a = 1600
2a + s = 1600….(ii)
s - 3a = 600….(iii)
From (ii) & (iii)
s = 1200, a = 200

And p + q = 500 + 5(200)
p + q = 1500
X = 1500 + 1200 + 1600 = 4300

S167. Ans.(b)
Sol.
The profit-sharing ratio of A and B
$= 520 \times 12 : (640 + x) \times 6 + (640 + x - 2x + 40) \times 6$
$= 520 \times 2 : 1320$
$= 26 : 33$
We can't find the value of x

S168. Ans.(d)
Sol. The ratio of milk to water in the initial mixture be 3:2
The quantity of milk and water be 0.6X and 0.4X liters respectively.
ATQ,

$$\frac{0.6X - 20 \times \frac{3}{5} + \frac{X}{2}}{0.4X - 20 \times \frac{2}{5}} = \frac{43}{12}$$

$$\frac{1.1X - 12}{0.4X - 8} = \frac{43}{12}$$

$$13.2X - 144 = 17.2X - 344$$

$$200 = 4X$$

$$50 = X$$

S169. Ans.(c)
Sol. $18 \times 6^2 - 112 = ? \times 4$
134=?

S170. Ans.(c)
Sol.
$11 \times 2^2 + 88 \div \sqrt{4} = ?$
$44 + 44 = ?$
$88 = ?$

S171. Ans.(e)
Sol.
$\sqrt{16} + \sqrt{36} \times \sqrt{49} = ?$
$46 = ?$

S172. Ans.(d)
Sol.
$3 \times 5 + 7 \times 8 - 626^{\frac{1}{4}}$
$71 - 5 = ?$
$66 = ?$

S173. Ans.(e)
Sol.
$78 + 16 \times 2^2 - 106 = ?^2$
$78 + 64 - 106 = ?^2$
$36 = ?^2$
$6 = ?$

S174. Ans.(e)
Sol.
$81 \div 9 + 5^2 - 27 = \sqrt{?}$
$7 = \sqrt{?}$
49 = ?

S175. Ans.(d)
Sol.
Invalid voters in city C = $620 \times \frac{20}{100} = 124$
Invalid voters in city D = $\frac{124}{4} \times 7 = 217$
Valid voters in city C = 620 – 124 = 496
Valid voters in city D = 300 -217 = 83
Required difference = 496 – 83 = 413

S176. Ans.(a)
Sol.
Total males in city A = $\frac{5}{12} \times 240 = 100$
Total females in city A = $\frac{7}{12} \times 240 = 140$
Invalid voters in city A = $\frac{3}{8} \times 240 = 90$
Valid voters in city A = 240 – 90 = 150
Valid female voters = 150/2=75
Valid male voters = 150 – 75 = 75
Invalid male voters = 100 – 75 = 25
Required difference = 75 – 25 = 50

S177. Ans.(c)
Sol.
X = 440 – 300 = 140
I. X > 120 (correct)
II. X < 150 (correct)
III. X = Total number of people who votes in city A in 2018 (incorrect)

S178. Ans.(c)
Sol.
Total number of people who vote in city E in 2013 = $\frac{125}{100} \times \frac{240+360}{2} = 375$
Invalid voters = $375 \times \frac{1}{3} = 125$

S179. Ans.(e)
Sol.
The total number of people who vote in city A in 2020 = $\frac{3}{5} \times 300 = 180$
Total number of females who vote in city A in 2020 = $\frac{4}{9} \times 180 = 80$
Required percentage = $\frac{80}{500} \times 100 = 16\%$

S180. Ans.(b)
Sol. Required ratio = (560-300) : (440+360)/2
= 260 : 400
= 13 : 20

S181. Ans.(a)

Sol.

Total items manufactured by A, B C together in 2021 = $1500 \times 3 = 4500$

Total items manufactured by A, B C together in 2022 = $1650 \times 3 = 4950$

Total items manufactured by B in 2021 = $\frac{20}{100} \times 4500 = 900$

Total items manufactured by B in 2022 = $\frac{1}{5} \times 4900 = 990$

Total items manufactured by C in 2021 = $\frac{4}{3} \times 900 = 1200$

Total items manufactured by A in 2021 = 4500 – 1200 -900 = 2400

Total items manufactured by A in 2022 = 4000 – 2400 = 1600

Total items manufactured by C in 2022 = 4950 – 1600 – 990 = 2360

Required difference = 1200+2360 – 1600 = 1960

S182. Ans.(b)

Sol.

Total items manufactured by A, B C together in 2021 = $1500 \times 3 = 4500$

Total items manufactured by A, B C together in 2022 = $1650 \times 3 = 4950$

Total items manufactured by B in 2021 = $\frac{20}{100} \times 4500 = 900$

Total items manufactured by B in 2022 = $\frac{1}{5} \times 4900 = 990$

Total items manufactured by C in 2021 = $\frac{4}{3} \times 900 = 1200$

Total items manufactured by A in 2021 = 4500 – 1200 -900 = 2400

Total items manufactured by A in 2022 = 4000 – 2400 = 1600

Total items manufactured by C in 2022 = 4950 – 1600 – 990 = 2360

Required percentage = $\frac{990}{1200} \times 100 = 82.5\%$

S183. Ans.(e)

Sol. Let the male candidates interviewed on Monday and the female candidates interviewed on Tuesday be 4a and 3a respectively.

Female candidates interviewed on Monday = 3a-10

Male candidates interviewed on Tuesday = 190 – 3a

Male candidates interviewed on Wednesday = 1.2(3a-10)

Given, 1.2(3a-10) + 190-3a + 4a = 90×3

3.6a – 12 + 190 +a = 270

4.6a = 92

a = 20

Total candidates (males and females) interviewed on Monday and Tuesday together

= 420 -190 =230

Days	Total candidates	Male candidates	Female candidates
Monday	130	80	50
Tuesday	190	130	60
Wednesday	100	60	40
Total	420	270	150

Required ratio = 40 : 80 = 1:2

S184. Ans.(c)
Sol. Let the male candidates interviewed on Monday and the female candidates interviewed on Tuesday be 4a and 3a respectively.
Female candidates interviewed on Monday = 3a-10
Male candidates interviewed on Tuesday = 190 – 3a
Male candidates interviewed on Wednesday = 1.2(3a-10)
Given, 1.2(3a-10) + 190-3a + 4a = 90×3
3.6a – 12 + 190 +a = 270
4.6a = 92
a = 20
Total candidates (males and females) interviewed on Monday and Tuesday together
= 420 -190 =230

Days	Total candidates	Male candidates	Female candidates
Monday	130	80	50
Tuesday	190	130	60
Wednesday	100	60	40
Total	420	270	150

Required percentage = $\frac{100-60}{100} \times 100 = 40\%$

S185. Ans.(d)
Sol. Let the male candidates interviewed on Monday and the female candidates interviewed on Tuesday be 4a and 3a respectively.
Female candidates interviewed on Monday = 3a-10
Male candidates interviewed on Tuesday = 190 – 3a
Male candidates interviewed on Wednesday = 1.2(3a-10)
Given, 1.2(3a-10) + 190-3a + 4a = 90×3
3.6a – 12 + 190 +a = 270
4.6a = 92
a = 20
Total candidates (males and females) interviewed on Monday and Tuesday together
= 420 -190 =230

Days	Total candidates	Male candidates	Female candidates
Monday	130	80	50
Tuesday	190	130	60
Wednesday	100	60	40
Total	420	270	150

Required difference = 60 – 50 = 10

S186. Ans.(c)
Sol. Let the male candidates interviewed on Monday and the female candidates interviewed on Tuesday be 4a and 3a respectively.
Female candidates interviewed on Monday = 3a-10
Male candidates interviewed on Tuesday = 190 – 3a
Male candidates interviewed on Wednesday = 1.2(3a-10)
Given, 1.2(3a-10) + 190-3a + 4a = 90×3
3.6a – 12 + 190 +a = 270
4.6a = 92
a = 20

Total candidates (males and females) interviewed on Monday and Tuesday together
= 420 -190 =230

Days	Total candidates	Male candidates	Female candidates
Monday	130	80	50
Tuesday	190	130	60
Wednesday	100	60	40
Total	420	270	150

Required answer = $\frac{80}{100} \times 130 + \frac{35}{100} \times 60 = 125$

S187. Ans.(c)
Sol. Let the male candidates interviewed on Monday and the female candidates interviewed on Tuesday be 4a and 3a respectively.
Female candidates interviewed on Monday = 3a-10
Male candidates interviewed on Tuesday = 190 – 3a
Male candidates interviewed on Wednesday = 1.2(3a-10)
Given, 1.2(3a-10) + 190-3a + 4a = 90×3
3.6a – 12 + 190 +a = 270
4.6a = 92
a = 20
Total candidates (males and females) interviewed on Monday and Tuesday together
= 420 -190 =230

Days	Total candidates	Male candidates	Female candidates
Monday	130	80	50
Tuesday	190	130	60
Wednesday	100	60	40
Total	420	270	150

Required difference = 150 -130 = 20

S188. Ans.(b)
Sol.

Let speed of stream be x km/hr.
Speed of boat in still water be y km/hr.
From (I),
$x = \frac{2}{3}y$
From (II),
$x + y = \frac{20}{2} = 10\,\text{km/hr}$
From (III),
$y - x = \frac{10}{5} = 2\,\text{km/hr}$
So, any two are sufficient

S189. Ans.(d)
Sol. Cannot be answered since price is not given.

S190. Ans.(a)

Sol. Let speed of train is S_t and length of train is L_t.

From I,

$$S_t = \frac{300+L_t}{45}$$

From II,

$$S_t = \frac{2L_t}{60}$$

From III,

$$S_t = \frac{L_t}{30}$$

II and III are same.

∴ I and either II or III are sufficient.